FUJI FILM PARTS LIST

FUJI
MINILAB 23
FILM PROCESSOR
FP350

FIFTH EDITION

PP3-D622E5

STANDARD MARKING SYSTEM CHART FOR METAL FASTENINGS

These screws, bolts and nuts are ISO metric coarse screw thread.

DRAWING REFERENCE NO.	PART NAME	SYMBOL	PART NO. (EXAMPLE)	SYMBOL USED IN FIG. (EXAMPLE)	NOTE
1	Screw, flat head	S	301S7000310	*S 3 ×10	M 3 ×10
2	Screw,pan head	N	301S2000310	*N 3 ×10	M 3 ×10
3	Screw, truss head	T	301S3000310	*T 3 ×10	M 3 ×10
4	Setscrew hex socket head (cup point)	PK	303S2000310	*PK 3 ×10	M 3 ×10
5	Setscrew hex socket head (cone point)	PT	303S3000310	*PT 3 ×10	M 3 ×10
6	Setscrew hex socket head (flat point)	PH	303S1000310	*PH 3 ×10	M 3 ×10
7	Setscrew slotted head (cup point)	FK	302S2000305	*FK 3 × 5	M 3 × 5
8	Setscrew slotted head (cone point)	FT	302S3000305	*FT 3 × 5	M 3 × 5
9	Setscrew slotted head (flat point)	FH	302S1000305	*FH 3 × 5	M 3 × 5
10	Bolt, hex head	R	304S1000310	*R 3 ×10	M 3 ×10
11	Bolt, hex socket head	Q	304S3000410	*Q 4 ×10	M 4 ×10
12	Nut, hex	Na	305S1120003	Na 3	M 3
13	Washer, plain	W	309S0110003	*W 3	M 3
14	Washer, spring	SW	309S0220003	*SW 3	M 3
15	E-ring	E	315S3000030	*E 3	Nominal diam. M3
16	External ring	CG	315S1000030	*CG 3	Nominal diam. M3
17	Internal ring	CA	315S2000030	*CA 3	Nominal diam. M3
18	Plastic ring	CP	309F0000	CP 3	Nominal diam. M3
19	Plastic ring	KP	——	KP 3	Nominal diam. M3
20	Screw, sems	A	308S1000310	A 3 ×10	M3×10, with flat washer
21	Screw, double sems	B	308S2000310	B 3 ×10	M3×10, with flat and spring washer

SHAPE

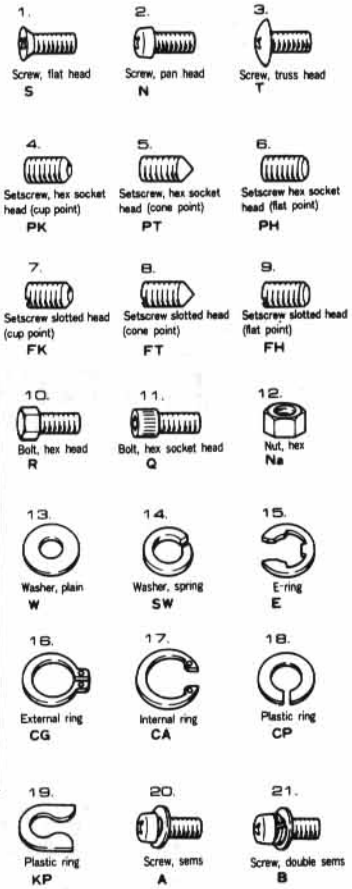

●MATERIAL INDICATING MARK

MATERIAL	MARK ADDED TO PART SYMBOL	MATERIAL CODE
Iron chromate	Not used	11
SUS 304 SUS 316 Titanium	* ** ***	00 05 80
Iron nickel	Shape-indicating symbol enclosed in a circle as in (N3)	10
Iron (black oxide coating)	Shape-indicating symbol enclosed in a square as in [N3]	12
Brass nickel	Shape-indicating symbol enclosed in a triangle as in △N3	55
Plastic	●	92

Screw → 3 0 1 S

Screw, set → 3 0 3 S

Screw, sems → 3 0 8 S

Bolt → 3 0 4 S □ □□ □□ □□

Item — Type (shape) — Material — Nominal diam. — Length

SHAPE CLASSIFICATION

Screw, pan head ····· 1

Screw, flat head ····· 7

Screw, truss head ···· 3

Setscrew, hex head (flat) ····· 1

Setscrew, hex head (cup point) ····· 2

Setscrew, hex head (cone) ····· 3

Bolt, hex ····· 1

Bolt, hex ····· 2

Bolt, hex socket head ····· 3

Screw, sems ····· 1

Screw, double sems ·· 2

●DECIPHERING THE IDENTIFICATION MARKINGS OF METAL FASTENINGS

Washer → 3 0 9 S □□ 2 □□ □□

Item — Type — Shape — Material — Nominal diam.

TYPE CLASSIFICATION

Washer, plain ····· 01

Washer, spring ····· 02

NuT → 3 0 5 S □ 1 2 □□ □□

Item — Type — Screw standards — Shape — Material — Nominal diam.

TYPE CLASSIFICATION

Nut, hex ····· 1

Ring, retaining → 3 1 5 S □ □□ 0 □□□

Item — Type — Material — Nominal diam.

TYPE CLASSIFICATION

C-ring, external ····· 1

C-ring, internal ····· 2

E-ring ····· 3

INDEX

INDEX 01
● Body Frame Section
(Waterless-Wash System)

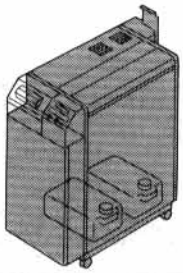

INDEX 02
● Body Frame Section
(Water-Wash System)

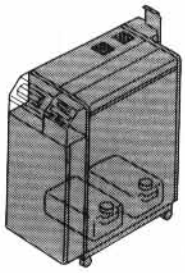

INDEX 03
● Feed Section (1)

INDEX 04
● Feed Section (2)

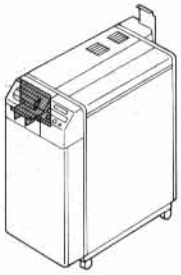

INDEX 05
● Rack Section (1) NQ1/NQ3

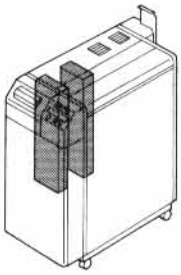

INDEX 06
● Rack Section (2) NQ2/NQS2/W2

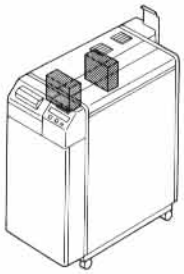

INDEX 07
● Rack Section (3) NQS1/NQ4/W1

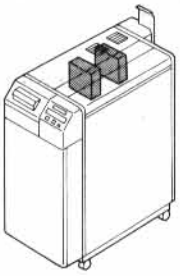

INDEX 08
● Rack Section (4) Dryer

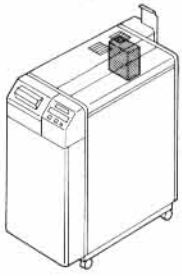

INDEX 09
● Dryer Section

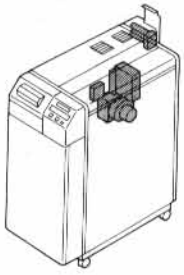

INDEX 10
● Circulation System
(Waterless-Wash System)

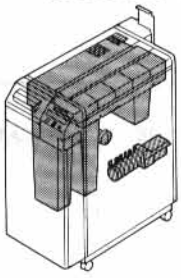

INDEX 11
● Circulation System
(Water-Wash System)

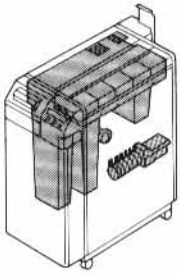

INDEX 12
● Control Section

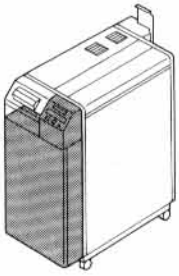

INDEX 13	INDEX 14	
● Standard/Optional Accessories	● FP350 Part No. Index List	

● The parts shown in the shaded area of each index illustration are described in the page or pages having the same index number.

USE OF PARTS LISTS AND EXPLODED VIEW ILLUSTRATIONS

○ The necessary replacement part should be sought from the exploded drawing of the pertinent section of the instrument. Remember that the exploded view parts that are shaded ▒ can only be supplied as unitized blocks.

○ The exploded drawing numbers correspond to the drawing reference numbers in the parts lists on the page opposite.

○ From the parts list record the part number and the part name.

○ When ordering parts, not only the part number and name, but also the instrument name and serial number should be provided.

○ Improved part substitutions will in certain instances result in part number changes without prior notice.

NOTE: The numbers indicated in the parts list "Qty" column indicate the quantity of the designated part incorporated in a single instrument. However, for reference ease some parts may appear twice or more in the parts lists.

○ The ※ mark following the exploded drawing reference numbers in the parts lists, indicate expendable parts which should always be kept on hand.

□ All parts other than those designated in the parts lists by the ● and ※ marks, are not stocked and delivery may thereby require an added period of time.

---

01 BODY FRAME SECTION (WATERLESS-WASH SYSTEM)

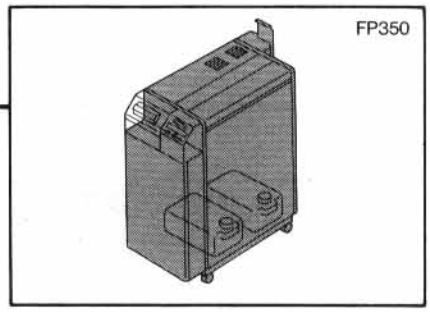

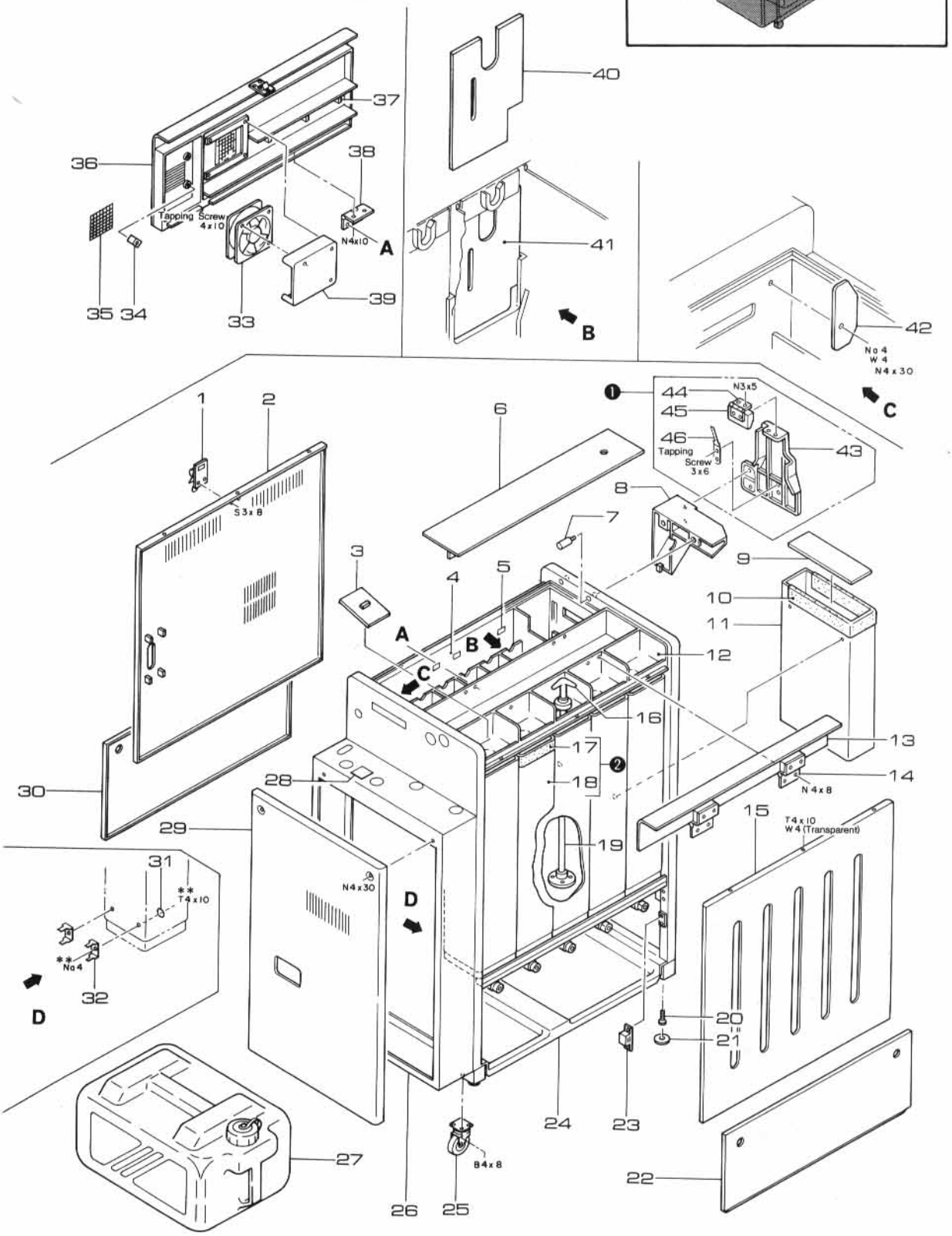

Drawing Ref.No.	Part No.	Part Name	Qty	Remarks
1●	316G03011	Latch	1	
2	350G03101	Cover	1	Ser.Nos.2850 and below
2	350G03101A	Cover	1	Ser.Nos.2851 and above
3	350G03118	Cover	1	For NQ1R
4	359G03101	Tank	1	Ser.Nos.2550 and below
4	359G03101A	Tank	1	Ser.Nos.2551 and above
5	362G03101	Chain, support	7	
6	350G03102	Cover	1	
7	308G03101	Screw, thumb	2	
8	356G03101	Bracket	1	
9	385G03014	Cover, cloth	1	
10※	364G03101	Pad, velvet	1	
11	358G03101	Receiver	1	
11	358G03109	Receiver	1	AL
12	359G03103	Tank	1	
13	350G03115	Cover	1	Ser.Nos.2540 and below
13	350G03115A	Cover	1	Ser.Nos.2541 and above
14●	314G03101	Hinge	2	
15	350G03103	Cover	1	Ser.Nos.2850 and below
15	350G03103A	Cover	1	Ser.Nos.2851 and above
16●	340G03102	Handle	5	
17	350G03113	Cover	1	Rubber
18●	359G03105	Tank	5	For replenishment
19●	341G03101	Rod, stirring	5	
20	304G03101	Bolt	4	
21	362G03102	Support	4	
22	350G03104	Cover	1	Ser.Nos.2850 and below

Drawing Ref.No.	Part No.	Part Name	Qty	Remarks
22	350G03104A	Cover	1	Ser.Nos.2851 and above
23●	316G03103	Strap	4	
24	373G03104	Pan, drain	1	
25●	367G03101	Caster	4	
26	358G03102	Box	1	
27●	359G06015	Tank	2	For DRAIN
28	345G03109	Cover	1	
29	350G03105A	Cover	1	
30	350G03106	Cover	1	Ser.Nos.2850 and below
30	350G03106A	Cover	1	Ser.Nos.2851 and above
31	375G03102	O-ring	5	
32	135G03103	Terminal, tab	10	187
33●	119G03101	Fan	1	U92A0
34	356G03103	Bracket	4	
35	364G03102	Gauze, wire	1	
36	350G03107	Cover	1	
37	346G03102	Rib	3	
38●	314G03102	Hinge	2	
39	350G03108	Cover	1	
40	345G03107	Plate, shield	1	NQ1
41	345G03101	Plate, shield	5	NQ2 ~NQ4
42	332G03101	Stop	1	
43	343G03101A	Hanger	1	
44	314G03013	Hinge	1	
45	363G03229	Guide	1	
46	343G03102C	Hook	1	
❶	343G03103	Hanger assembly		
❶	343G03104	Hanger assembly		Same as AL
❷	359G03114	Tank assembly		For NQ2R
●	359G03104	Tank assembly		Parts 4 and 12

02 BODY FRAME SECTION (WATER-WASH SYSTEM)

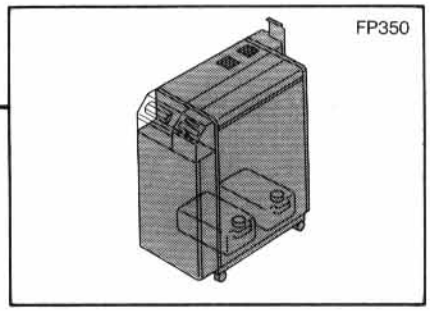

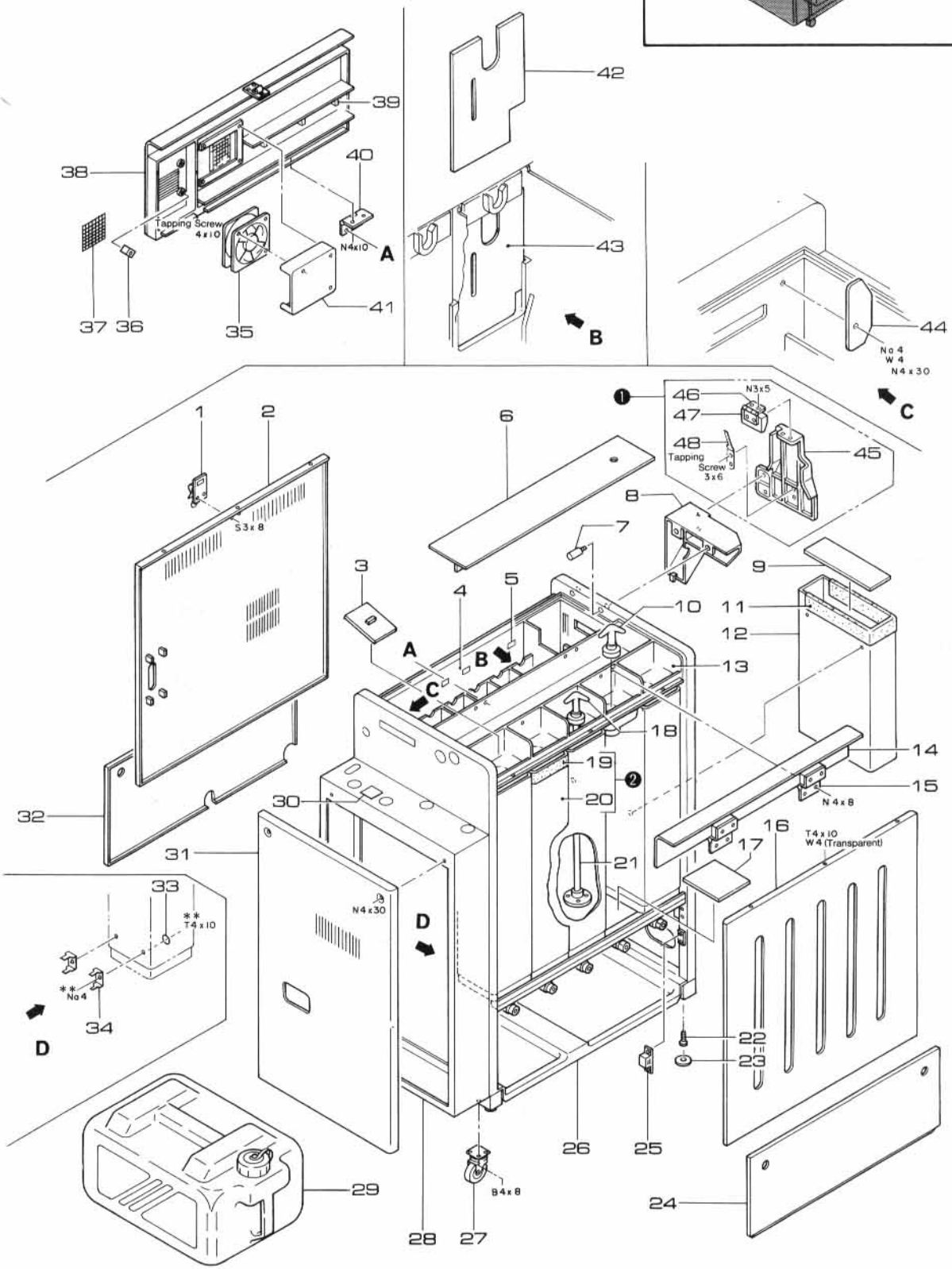

Drawing Ref.No.	Part No.	Part Name	Qty	Remarks
1●	316G03011	Latch	1	
2	350G03101	Cover	1	Ser.Nos.2850 and below
2	350G03101A	Cover	1	Ser.Nos.2851 and above
3	350G03118	Cover	1	For NQ1R
4	359G03101	Tank	1	Ser.Nos.2550 and below
4	359G03101A	Tank	1	Ser.Nos.2551 and above
5	362G03101	Chain, support	7	
6	350G03102	Cover	1	
7	308G03101	Screw, thumb	2	
8	356G03101	Bracket	1	
9	385G03014	Cover, cloth	1	
10	340G03103	Handle	1	
11※	364G03101	Pad, velvet	1	
12	358G03101	Receiver	1	
12	358G03109	Receiver	1	AL
13	359G03103	Tank	1	
14	350G03115	Cover	1	Ser.Nos.2540 and below
14	350G03115A	Cover	1	Ser.Nos.2541 and above
15●	314G03101	Hinge	2	
16	350G03103	Cover	1	Ser.Nos.2850 and below
16	350G03103A	Cover	1	Ser.Nos.2851 and above
17	347G03101	Spacer	1	
18●	340G03102	Handle	4	
19	350G03113	Cover	1	Rubber
20●	359G03105	Tank	4	For replenishment
21●	341G03101	Rod, stirring	4	
22	304G03101	Bolt	4	
23	362G03102	Support	4	

Drawing Ref.No.	Part No.	Part Name	Qty	Remarks
24	350G03104	Cover	1	Ser.Nos.2850 and below
24	350G03104A	Cover	1	Ser.Nos.2851 and above
25●	316G03103	Strap	4	
26	373G03104	Pan, drain	1	
27●	367G03101	Caster	4	
28	358G03102	Box	1	
29●	359G06015	Tank	2	For DRAIN
30	345G03109	Cover	1	
31	350G03105	Cover	1	
32	350G03117	Cover	1	Ser.Nos.2850 and below
32	350G03117A	Cover	1	Ser.Nos.2851 and above
33	375G03102	O-ring	4	
34	135G03103	Terminal, tab	8	187
35●	119G03101	Fan	1	U92A0
36	356G03103	Bracket	4	
37	364G03102	Gauze, wire	1	
38	350G03107	Cover	1	
39	346G03102	Rib	3	
40●	314G03102	Hinge	2	
41	350G03108	Cover	1	
42	345G03107	Plate, shield	1	For NQ1
43	345G03101	Plate, shield	5	For NQ2 ~NQ4
44	332G03101	Stop	1	
45	343G03101	Hanger	1	
46	314G03013	Hinge	2	
47	363G03229	Guide	1	
48	343G03102C	Hook	1	
❶	343G03103	Hanger assembly		
❷	359G03114	Tank assembly		For NQ2R
●	359G03104	Tank assembly		Parts 4 and 13

FEED SECTION (1)

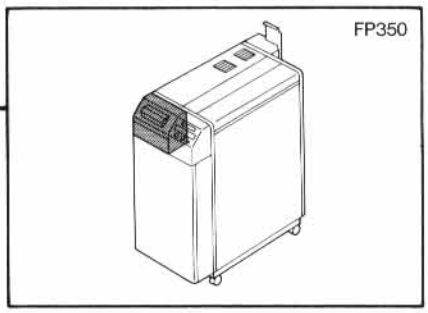

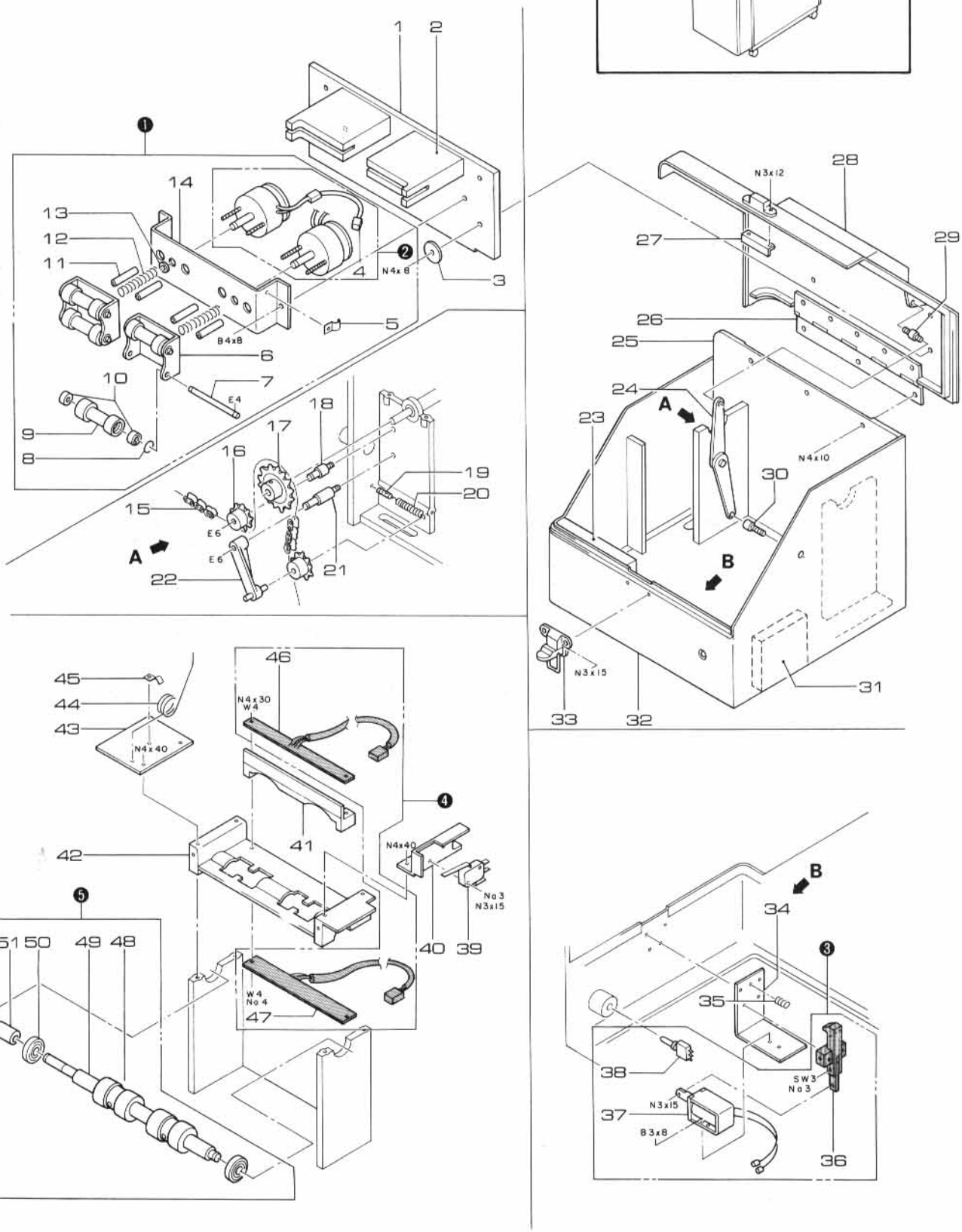

Drawing Ref.No.	Part No.	Part Name	Qty	Remarks
1	401G03102A	Plate, pressure	1	
2●	362G03012A	Support	2	
3	309G03101	Washer	6	20× 4.5×1.5 SUS
4●	120G03002	Connector	3	1625-2P-1 with pins
5	356G03037	Plate, keep	1	
6	356G03038	Bracket	2	
7	319N1136	Shaft	4	
8	338G03019	Ring	8	
9●	334G03101	Roller	4	
10●	322SA003	Support, shaft	8	
11	363G03064	Guide	4	
12●	388G03001	Spring, compression	2	
13●	309G03014	Washer	4	4.8 ×10× 0.8
14	356G03106	Bracket	1	
15●	325G03101	Chain	1	
16	326G03101	Sprocket	3	
17	326G03013	Sprocket	1	
18	319G03104	Shaft	1	
19	308G03102	Setscrew	1	
20●	388G03101	Spring, tension	1	
21	319G03103	Shaft	1	
22	341G03102	Arm	1	
23	345G03110	Plate, shield	1	
24●	341G03011	Arm	1	
25	358G03103	Frame	1	
26●	314G03103	Hinge	1	
27	356G03104	Bracket	1	
28	350G03109	Cover	1	
29	319G03101	Shaft	1	
30	319G03102	Shaft	1	
31	345G03108	Plate, shield	1	
32	358G03110	Frame	1	
33●	316G03013	Latch	1	
34	356G03111	Bracket	1	
35●	388G03103	Spring, compression	1	

Drawing Ref.No.	Part No.	Part Name	Qty	Remarks
36	341G03104	Arm	1	
37●	107G03101	Solenoid	1	1721H 80VDC
38●	128G03101	Switch	1	
39●	128G03018	Microswitch	3	
40	356G03108	Bracket	1	Ser.Nos.2550 and below
40	356G03108A	Bracket	1	Ser.Nos.2551 and above
41	356G03107	Bracket	1	
42	363G03201	Guide	1	Ser.Nos.8206 and below
42	363G03236	Guide	1	Ser.Nos.8207 and above
43	356G03110	Bracket	1	
44●	388G03102A	Spring, coiled	1	Ser.Nos.0688 and above
45	401G03103	Plate, keep	1	
46●	812G03101A	PCB, light receptor	1	Sharp PT550F×4, coupled 39
47●	812G03101A	PCB, light emitting	1	Sharp GL514A×4, Coupled 47
48●	334G03102	Roller	2	Ser.Nos.8206 and below
48	334G03114	Roller	2	Ser.Nos.8207 and above
49	319G03105	Shaft	1	
50●	322G03012	Support, shaft	2	6000LLB
51	338G03110	Collar	1	Ser.Nos.8141 and above
❶	801G03101	Pressure roller unit		
❷●	810G03012	Solenoid assembly	2	3EC-85V-1/4
❸	810G03101	Auto, rock solenoid assembly		
❹●	812G03101A	Sensor assembly		
❺	810G03102	Feed roller unit		

FEED SECTION (2)

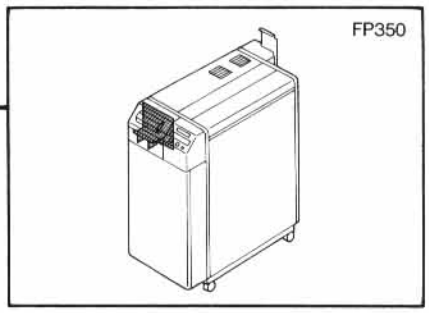

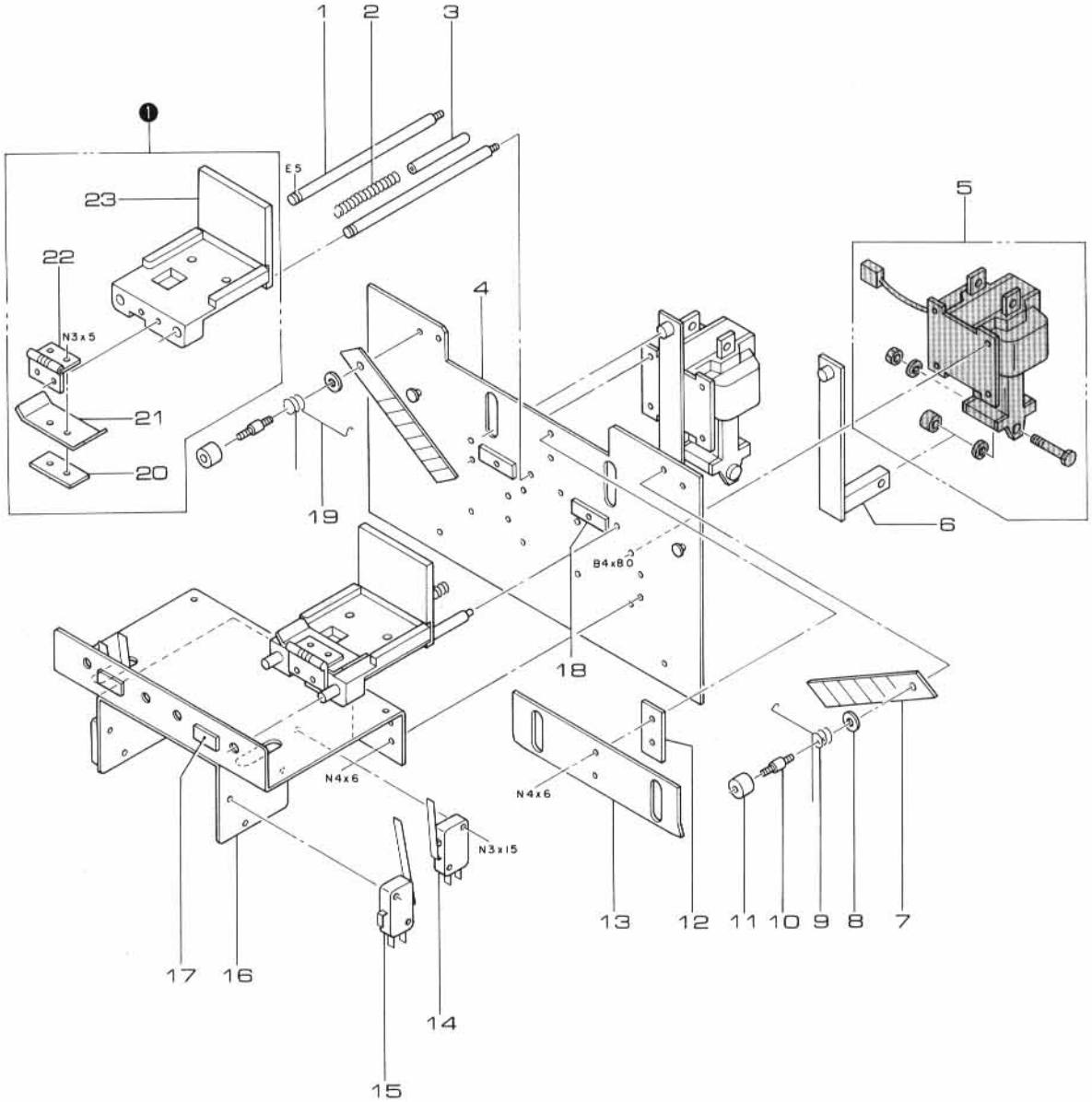

Drawing Ref.No.	Part No.	Part Name	Qty	Remarks
1	319G03019	Shaft	4	
2●	388G03013	Spring, compression	2	
3	317G03011	Cap	2	
4	356G03112	Bracket	1	
5	107G03011	Solenoid	2	AS45151
6	341G03103B	Arm	2	Ser.Nos.0188 and above
7※	393G03011	Blade, cutter	2	6 sheets/box
8	309G03013	Washer	2	
9●	388G03012	Spring, coiled	1	
10	308G03011	Screw, special	2	
11	305G03011	Nut	2	
12	363G03013	Plate, guide	1	
13	350G03020	Cover	1	
14●	128G03018	Microswitch	3	
15●	128G03019	Microswitch	3	
16	356G03113	Bracket	1	
17	386G03004	Absorber, shock	2	
18	363G03062A	Guide	2	Ser.Nos.4001 and above
19●	388G03014	Spring, coiled	1	

Drawing Ref.No.	Part No.	Part Name	Qty	Remarks
20	347G03003	Spacer	2	
21	401G03012	Plate, keep	2	
22●	314G03013	Hinge	2	
23	368G03011A	Mount, manual control	2	Ser.Nos.2600 and below
23	368G03011B	Mount, manual control	2	Ser.Nos.2601 to 3835
23	368G03011C	Mount, manual control	2	Ser.Nos.3836 to 4000
23	368G03011D	Mount, manual control	2	Ser.Nos.4001 and above
❶●	810G03011	Drive section assembly	2	Ser.Nos.2600 and below
❶●	810G03011A	Drive section assembly	2	Ser.Nos.2601 to 3835
❶●	810G03011B	Drive section assembly	2	Ser.Nos.3836 to 4000
❶●	810G03011C	Drive section assembly	2	Ser.Nos.4001 and above

RACK SECTION (1) NQ1/NQ3

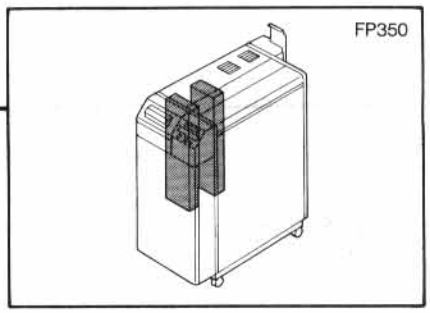

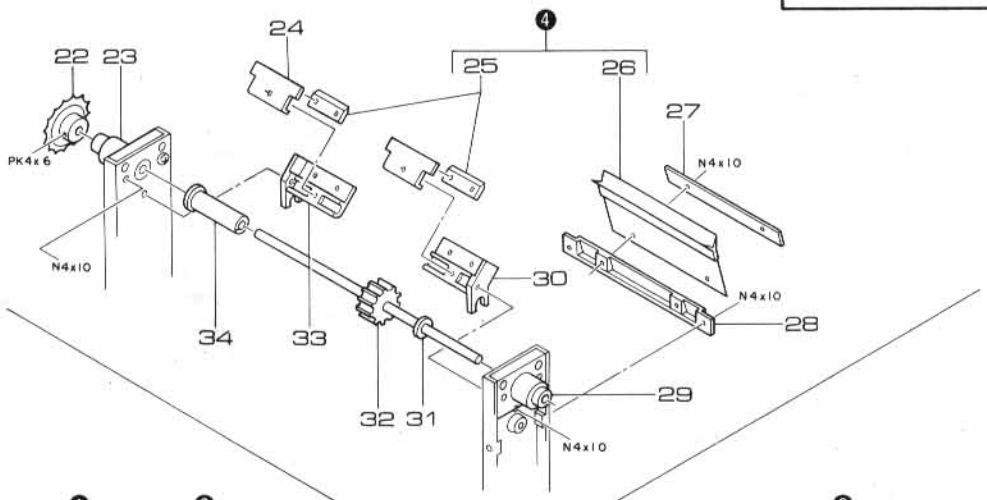

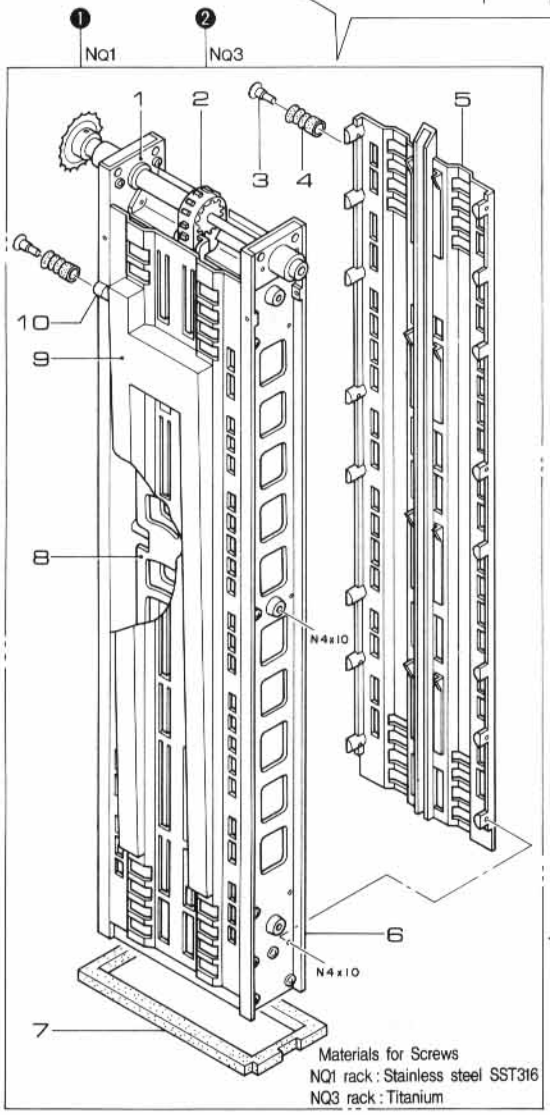

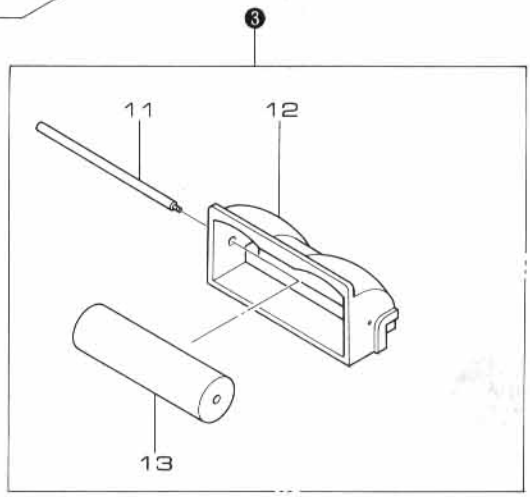

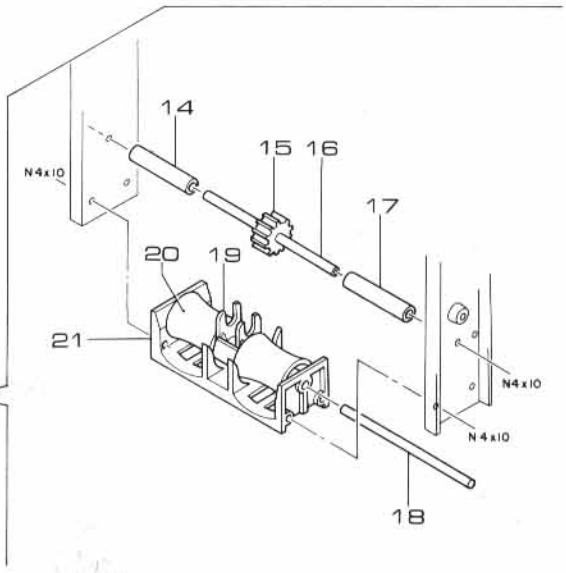

Drawing Ref.No.	Part No.	Part Name	Qty	Remarks
1	349G03101	Plate, side	4	
2●	323G03101A	Belt	2	For NQ1, NQ3 Ser.Nos. 4261 and above Ser.Nos.6121 and above
2●	323G03101B	Belt	2	Ser.Nos.7381 and above
3	372G03103	Fitting, tube	4	
4●	372G03102	Fitting, tube	4	Rubber
5	363G03202	Plate, guide	2	For NQ1, NQ3
5	363G03202A	Plate, guide	2	For NQ1, NQ3 Ser.Nos. 4261 and above Ser.Nos.6121 and above
6	349G03101	Plate, side	4	
7※	381G03101	Lid, floating	1	For NQ1 Ser.Nos.2513 and below
7※	381G03101A	Lid, floating	1	For NQ1 Ser.Nos. 2514 and above
7※	381G03103	Lid, floating	1	For NQ3 Ser.Nos. 2513 and below
7※	381G03103A	Lid, floating	1	For NQ3 Ser.Nos. 2514 to 3220
7※	381G03103B	Lid, floating	1	For NQ3 Ser.Nos. 3221 and above
8	363G03203	Guide	1	For NQ1 SUS316
8	363G03204	Guide	1	For NQ3 Titanium
9	363G03205	Plate, guide	2	For NQ1, NQ3
9	363G03205A	Plate, guide	2	For NQ1, NQ3 Ser.Nos. 4261 and above Ser.Nos.6121 and above
10	372G03104	Fitting, tube	4	
11	319G03017	Shaft	3	
12	363G03206	Guide	1	
12	363G03206A	Guide	1	Ser.Nos.7741 and above
13	334G03013	Roller	1	
14	338G03104	Collar	14	
15	326G03105	Wheel belt	7	
16	319G03107	Shaft	4	For NQ1, NQS1, NQS2, NQ4 SUS

Drawing Ref.No.	Part No.	Part Name	Qty	Remarks
16	319G03108	Shaft	2	For NQ2, NQ3
17	338G03104	Collar	14	
18	319G03015	Shaft	5	For NQ1, NQS1, NQS2, NQ4, DRY SUS
18	319G03027	Shaft	2	For NQ2, NQ3
19	363G03207	Guide	7	
19	363G03207A	Guide	7	Ser.Nos.7066 and above
19	363G03207B	Guide	7	Ser.Nos.9146 and above
20●	334G03105	Roller	10	For NQ1, NQ2, NQ3, NQS2, DRY
21	363G03208	Guide	5	For NQ1, NQ2, NQ3, NQS2, DRY
22●	326G03103	Sprocket	8	
23●	322G03101	Support, shaft	7	
24	401G03104	Plate, reinforcement	10	
24	401G03107	Plate, reinforcement	10	Ser.Nos.7361 and above
25	384G03104	Blade, squeegee	10	Ser.Nos.7361 and above
26※	384G03102	Blade, squeegee	5	
27	401G03105	Plate, reinforcement	5	
28	356G03116	Bracket	5	
29●	322G03102	Support, shaft	7	
30	356G03161	Bracket	5	Ser.Nos.7361 and above
31	346G03101	Rubber, draining	6	For NQ1, NQ2, NQ3, NQS1, NQS2, NQ4
32	319G03106	Shaft	3	For NQ1, NQS2, DRY
32	319G03125	Shaft	2	For NQ2, NQS3, (Titanium)
33	356G03162	Bracket	5	Ser.Nos.7361 and above
34	338G03101	Collar	4	For NQ1, NQ2, NQ3, NQS2
❶●	802G03101	N1 rack assembly		
❷●	802G03103	N3 rack assembly		
❸●	802G03107	Crossover rack assembly		For NQ1 entrance
❹●	384G03103	Blade unit		For NQ1, NQ3 ~NQ4

RACK SECTION (2) NQ2/NQS2/W2

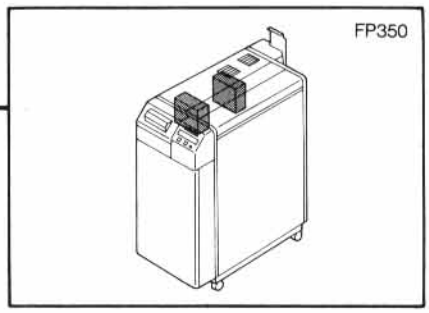

❸

15 16 17 18 19 20 21 22 23 24 25 26 27

PK4x6

N4x10

❶ NQS2,W2

1 2 3 4 5 6 7

Material for Screws : Stainless steel SST316

28 29 30 31 32

PK4x6

❷ NQ2

8 9 10 11 12 13 14

Material for Screws : Titanium

33 34 35 36 37 38 39 40

Drawing Ref.No.	Part No.	Part Name	Qty	Remarks
1	349G03102	Plate, side	8	
2●	323G03102	Belt	2	For NQ2, NQS2
3	363G03210	Plate, guide	2	
4	349G03102	Plate, side	8	
5※	381G03105	Lid, floating	1	For NQS2 Ser.Nos. 2513 and below
5※	381G03105A	Lid, floating	1	For NQS2 Ser.Nos. 2514 and above
6	363G03211	Plate, guide	2	
7	363G03213	Guide	1	For NQS2 SUS316
8	349G03102	Plate, side	8	
9●	323G03102	Belt	2	For NQ2, NQS2
10	363G03210	Plate, guide	2	
11	349G03102	Plate, side	8	
12※	381G03102	Lid, floating	1	For NQ2 Ser.Nos. 2513 and below
12※	381G03102A	Lid, floating	1	For NQ2 Ser.Nos. 2514 and above
13	363G03211	Plate, guide	2	
14	363G03212	Guide	1	For NQ2 Titanium
15	326G03103	Sprocket	8	
16●	322G03101	Support, shaft	7	
17	401G03104	Plate, reinforcement	10	
17	401G03107	Plate, reinforcement	10	Ser.Nos.7361 and above
18※	384G03101	Blade, squeegee	10	
18	384G03104	Blade, squeegee	10	Ser.Nos.7361 and above
19※	384G03102	Blade, squeegee	5	
20	401G03105	Plate, reinforcement	5	
21	356G03116	Bracket	5	
22	356G03114	Bracket	5	
23●	322G03102	Support, shaft	7	
24	346G03101	Rubber, draining	6	For NQ1, NQ2, NQ3, NQS1, NQS2, NQ4

Drawing Ref.No.	Part No.	Part Name	Qty	Remarks
25	319G03106	Shaft	5	For NQ1, NQ2, NQ3, NQS2, DRY
26	356G03115	Bracket	5	
26	356G03162	Bracket	5	Ser.Nos.7361 and above
27	338G03101	Collar	4	
28●	326G03103	Sprocket	8	
29●	322G03101	Support, shaft	7	
30	338G03101	Collar	4	
31	319G03106	Shaft	3	For NQ1, NQS2, DRY
31	319G03125	Shaft	2	For NQ2, NQS3, (Titanium)
32●	322G03102	Support, shaft	7	
33	338G03104	Collar	14	
34	326G03105	Wheel belt	7	
35	319G03107	Shaft	4	For NQ1, NQS1, NQ2, NQ4 SUS
35	319G03108	Shaft	2	For NQ2, NQ3 Titanium
36	338G03104	Collar	14	
37	319G03027	Shaft	2	For NQ2, NQ3 Titanium
37	319G03015	Shaft	5	For NQ1, NQS1, NQS2, NQ4, DRY SUS
38	363G03207	Guide	7	
39●	334G03105	Roller	10	For NQ1, NQ2, NQ3, NQS2, DRY
40	363G03208	Guide	5	For NQ1, NQ2, NQ3, NQS2, DRY
❶●	802G03105A	NQS2 rack assembly		(Titanium)
❷●	802G03102	NQ2 rack assembly		
❸●	384G03103	Blade unit		

RACK SECTION (3) NQS1/NQ4/W1

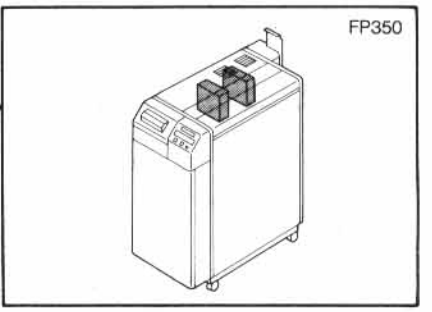

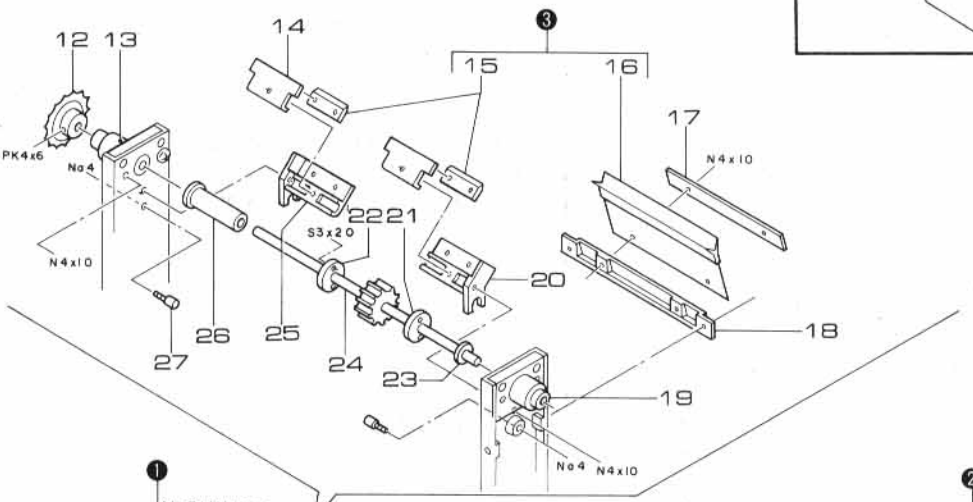

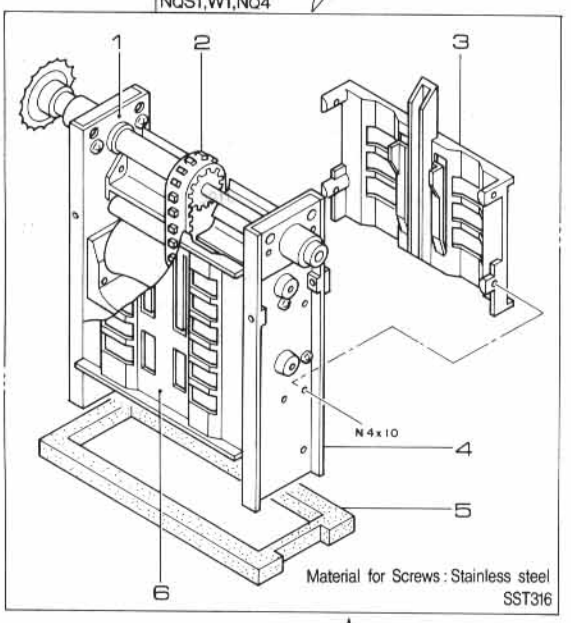

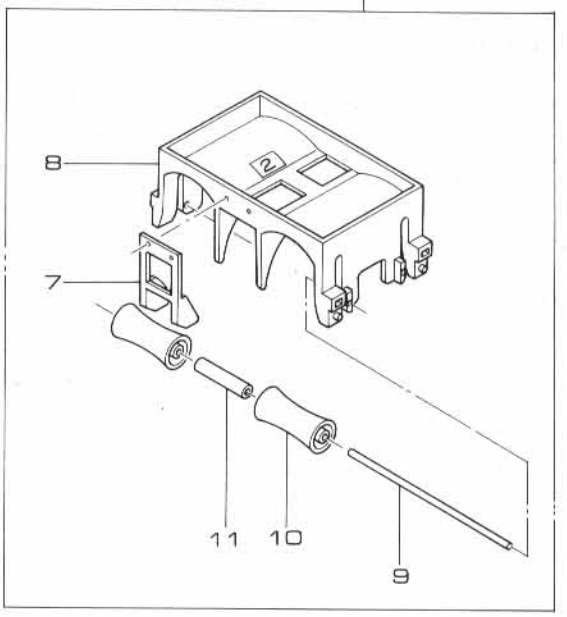

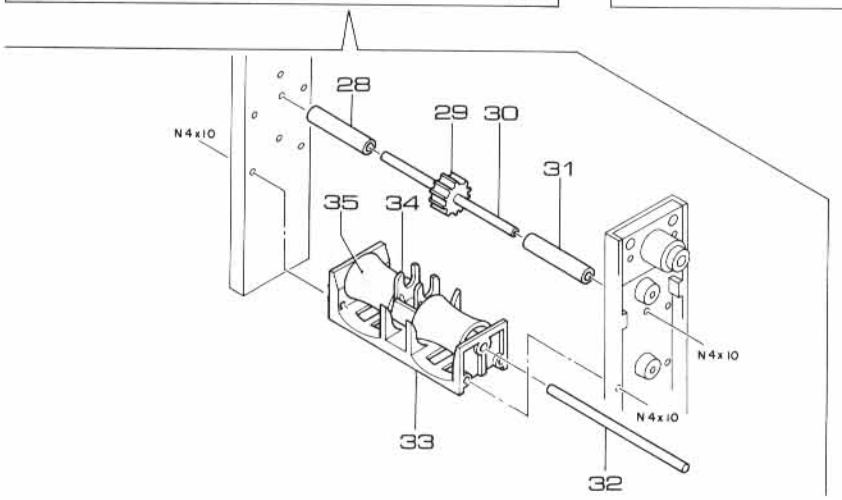

Drawing Ref.No.	Part No.	Part Name	Qty	Remarks
1	349G03102	Plate, side	8	
2●	323G03103	Belt	2	For NS1, N4
3	363G03214	Plate, guide	2	
4	349G03102	Plate, side	8	
5※	381G03104	Lid, floating	1	For NQS1 Ser.Nos. 2513 and below
5※	381G03104A	Lid, floating	1	For NQS1 Ser.Nos. 2514 and above
5※	381G03106	Lid, floating	1	For NQ4 Ser.Nos. 2513 and below
5※	381G03106A	Lid, floating	1	NQ4 Ser.Nos. 2514 and above
6	363G03215	Plate, guide	2	
7	363G03233A	Guide	1	
8	363G03216	Guide	5	Ser.Nos.2650 and below
8	363G03216A	Guide	5	Ser.Nos.2651 to 7855
8	363G03232A	Guide	5	Ser.Nos.7856 and above
9	319G03109	Shaft	6	Rack NO.4,5,6 (SUS)
9	319G03110	Shaft	4	Rack NO.2,3 (Titanium)
10●	334G03107	Roller	20	
11●	338G03105	Collar	10	
12●	326G03103	Sprocket	8	
13●	322G03101	Support, shaft	7	
14	401G03104	Plate, reinforcement	10	
14	401G03107	Plate, reinforcement	10	Ser.Nos.7361 and above
15※	384G03101	Blade, squeegee	10	
15	384G03104	Blade, squeegee	10	Ser.Nos.7361 and above
16※	384G03102	Blade, squeegee	5	
17	401G03105	Plate, reinforcement	5	
18	356G03116	Bracket	5	
19●	322G03102	Support, shaft	7	
20	356G03114	Bracket	5	
20	356G03161	Bracket	5	Ser.Nos.7361 and above
21	363G03217	Guide	2	For NQS1, NQ4

Drawing Ref.No.	Part No.	Part Name	Qty	Remarks
22	363G03218	Guide	2	For NQS1, NQ4
23	346G03101	Rubber, draining	6	For NQ1, NQ2, NQ3, NQS1, NQS2, NQ4
24	319G03114	Shaft	2	For NQS1, NQ4
25	356G03115	Bracket	5	
25	356G03162	Bracket	5	Ser.Nos.7361 and above
26	338G03102	Collar	2	
27	308G03103	Screw, thumb	4	For NQS1, NQ4 only
28	338G03104	Collar	14	
29	326G03105	Wheel belt	7	
30	319G03107	Shaft	4	
31	338G03104	Collar	14	
32	319G03015	Shaft	5	For NQ1, NQS1, NQS2, NQ4, DRY SUS
33	363G03209	Guide	2	For NQS1, NQ4
34	363G03207	Guide	7	
34	363G03207A	Guide	7	Ser.Nos.7000 and above
35●	334G03106	Roller	10	For NQS1, NQ4, DRY
❶●	802G03104	Rack assembly, for NQ4		
❶●	802G03115	Rack assembly, for NQS1, W1		(Titanium)
❷●	802G03108	Crossover rack assembly		Rack NO.4,5,6 (SUS)
❷●	802G03109	Crossover rack assembly		Rack NO.2,3 (Titanium)
❷	802G03112	Crossover rack assembly		Ser.Nos.7000 to 7855 (SUS)
❷	802G03112A	Crossover rack assembly		Ser.Nos.7856 and above (SUS)
❷	802G03113	Crossover rack assembly		Ser.Nos.7000 to 7855 (Titanium)
❷	802G03113A	Crossover rack assembly		Ser.Nos.7856 and above (Titanium)
❸●	384G03103	Blade unit		

RACK SECTION (4) DRYER

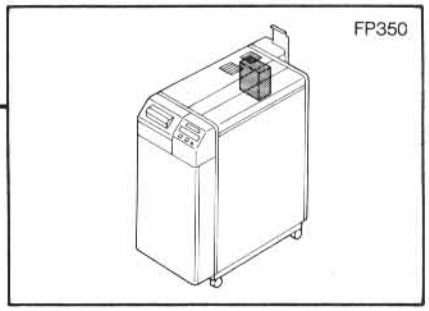

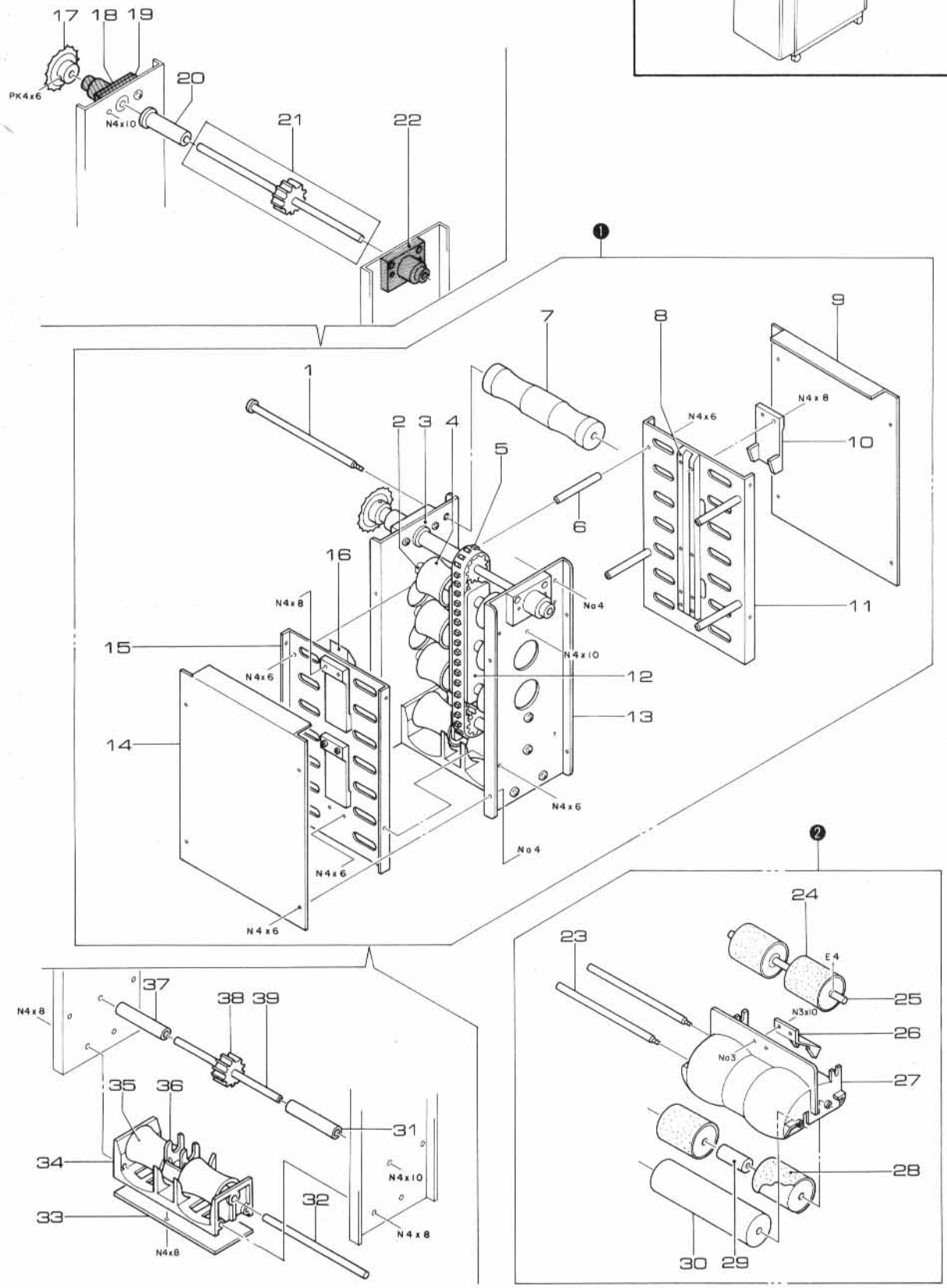

Drawing Ref.No.	Part No.	Part Name	Qty	Remarks
1	319G03020	Shaft	1	
2	338G03106	Collar	10	
3	349G03103	Plate, side	1	
4●	334G03106	Roller	10	
5●	323G03104	Belt	1	Ser.Nos.7380 and below
5●	323G03104B	Belt	1	Ser.Nos.7381 to 8435
5●	323G03107	Belt	1	Ser.Nos.8436 and above
6	319G03111	Shaft	4	
7●	334G03015	Roller	1	
8	363G03219	Guide	1	
9	350G03110	Cover	2	
10	363G03221	Guide	3	
11	363G03222	Plate, guide	2	
12	363G03223	Guide	1	
13	349G03104	Plate, side	1	
14	350G03110	Cover	2	
15	363G03222	Plate, guide	2	
16	363G03220	Guide	1	
17●	326G03103	Sprocket	8	
18●	322G03101	Support, shaft	7	
19	401G03106	Plate, reinforcement	2	
20	338G03103	Collar	1	
21	319G03106	Shaft	5	For NQ1, NQ2, NQ3, NQS2, DRY
22●	322G03102	Support, shaft	7	
23	319G03017	Shaft	3	

Drawing Ref.No.	Part No.	Part Name	Qty	Remarks
24●	334G03018	Roller	2	
25	319G03029	Shaft	1	
26	363G03235	Guide	1	
27	363G03224	Guide	1	DRY entrance crossover
27	363G03224A	Guide	1	Ser.Nos.7261 and above
28●	334G03014	Roller	1	
28	334G03113	Roller	1	Ser.Nos.7261 and above
29	338G03109	Collar	1	
30●	334G03109	Roller	1	
31	338G03104	Collar	14	
32	319G03015	Shaft	5	
33	350G03111	Cover	1	
34	363G03208	Guide	5	
35●	334G03105	Roller	10	
36	363G03207	Guide	7	
36	363G03207A	Guide	7	Ser.Nos.7000 to 8880
36	363G03207	Guide	1	Ser.Nos.8881 and above only DRY
37	338G03104	Collar	14	
38	326G03105	Wheel, belt	7	
39	319G03112	Shaft	1	
❶●	802G03106	Dryer rack assembly		
❷●	802G03110	Crossover rack assembly		Rack NO.8

DRYER SECTION

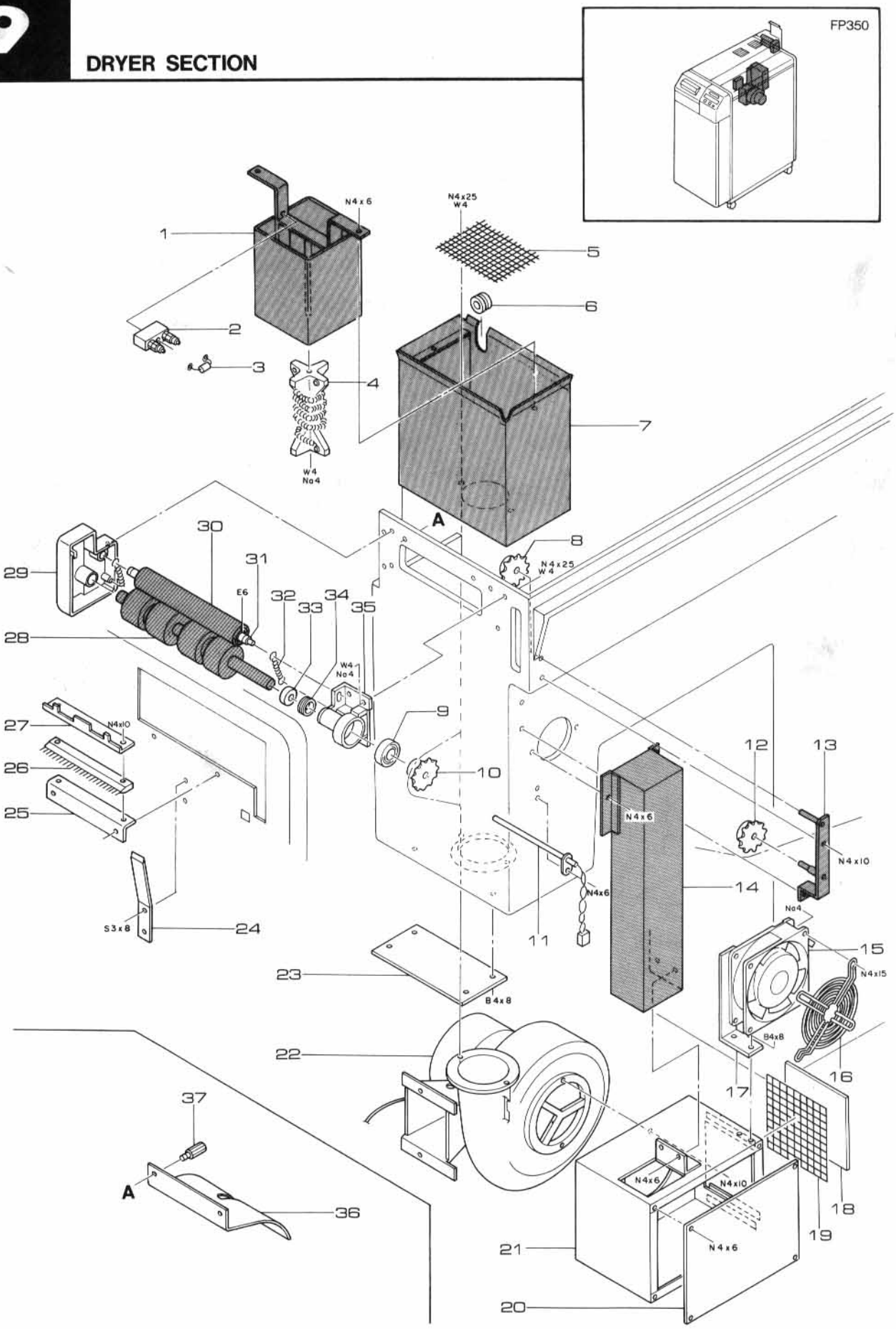

Drawing Ref.No.	Part No.	Part Name	Qty	Remarks
1	358G03105	Box	1	
2	137G03013	Holder, fuse	1	
3※	137G03101	Fuse, thermal	1	250V 15A 152℃ SF152U
4●	117G03102	Heater	1	Outside Japan 230V 1kW DH3
5	364G03103	Gauze, wire	1	Ser.Nos.2741 and above
6	318G03012	Grommet	1	Ser.Nos.2600 and below
6	318G03102	Grommet	1	Ser.Nos.2601 and above
7	358G03106	Box	1	
8●	326G03104	Sprocket	1	
9●	322G03103	Support, shaft	1	608ZZ
10●	326G03103	Sprocket	8	
11●	115G03101	Thermistor	1	PXN24
12●	326G03101	Sprocket	3	
13	356G03117	Bracket	1	
14	369G03101	Duct	1	
15●	119G03102	Fan	1	U12CO Not need water-wash system
16	364G03105	Guard	1	Ser.Nos.4001 and above Not need water-wash system
17	356G03118	Bracket	1	Not need water-wash system
18※	376G03001	Filter	1	
19	364G03107	Gauze, wire	2	Ser.Nos.8196 and above

Drawing Ref.No.	Part No.	Part Name	Qty	Remarks
20	350G03112	Cover	1	
21	358G03107	Box	1	
22●	119G03002	Fan	1	SF50-5
23	356G03119	Bracket	1	
24	363G03225	Guide	1	
25	356G03120	Bracket	1	
26●	387G03001	Brush, antistatic	1	
27	344G03101	Fork	1	Ser.Nos.7770 to 8975
27	344G03102	Fork	1	Ser.Nos.8976 and above
28●	334G03110	Roller	1	
28●	334G03110A	Roller	1	Ser.Nos.7000 to 7769
28●	334G03110B	Roller	1	Ser.Nos.7770 and above
29	356G03122	Bracket	1	
30●	334G03016	Roller	1	
31	319G03113	Shaft	1	
32●	388G03016	Spring, tension	2	
32●	388G03115	Spring, tension	2	
33	338G03107	Collar	1	
33	338G03119	Collar	1	Ser.Nos.9362 and above Aluminum
34	322G03111	Support, shaft	1	Ser.Nos.9362 and above
35	356G03121	Bracket	1	Ser.Nos.9361 and below
35	356G03188	Bracket	1	Ser.Nos.9362 and above
36	363G03226	Guide	1	
37	308G03012	Screw, thumb	2	

10 CIRCULATION SYSTEM (WATERLESS-WASH SYSTEM)

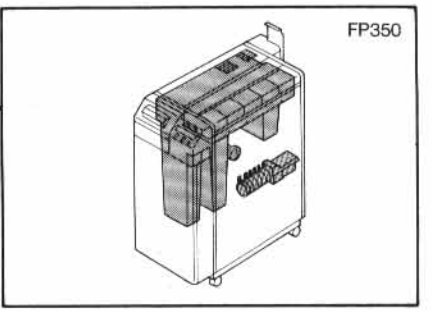

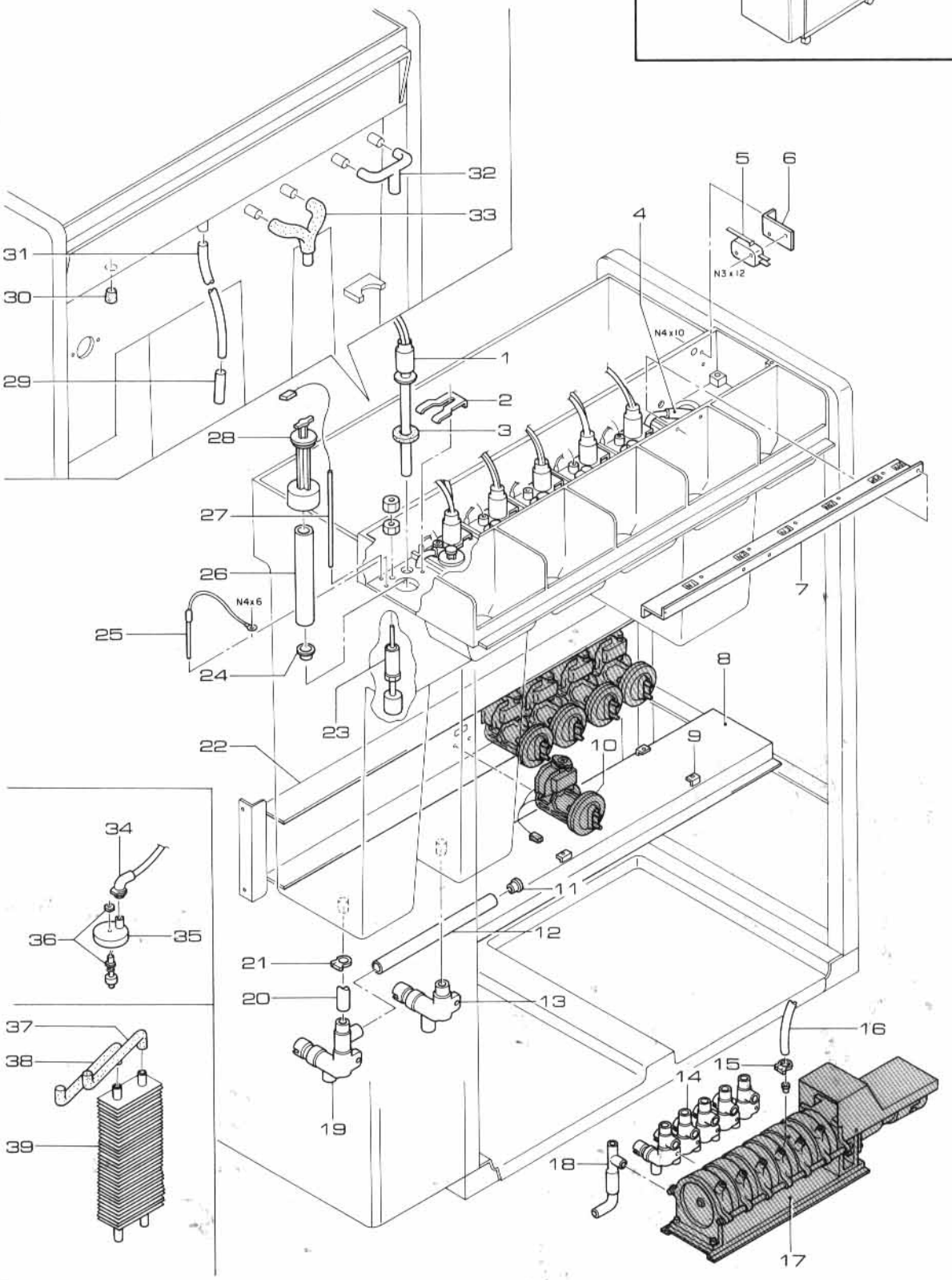

Drawing Ref.No.	Part No.	Part Name	Qty	Remarks
1●	117S0009	Heater	4	For NQ2, NQS1, 2, NQ4 240V, 200W
1●	117S0010	Heater	1	For NQ3 240V, 288W
1	117S0032	Heater	1	For NQ1 SUS
2	401G03101	Plate, keep	6	
3●	338G03111	Ring, rubber	6	
4●	AFNCP4-3627	Hose	1	1m, φ 6×10, 9m
5●	128G03019	Microswitch	3	
6	356G03123	Bracket	1	
7	350G03114	Cover	1	
8	357G03101	Mount, pump	1	
9●	386G03101	Rubber, shock-absorbing	4	
10●	133G06001	Pump	5	
11	374G03102	Limitter, flow	3	
12	370G02002	Hose	1	φ15×20
13●	374G03105	Valve	1	For NQ3
14●	374G03104	Valve	4	For 2, NQS1, 2, NQ4
15●	316G03112	Clamp, hose	37	MH-44N (small)
16●	370G02002	Hose	1	1m, φ15×20, 8m
17●	133G03101	Pump	1	
17●	133G03101-M	Pump	1	Indicates Ⓜ label
18	372G03110	T-joint	1	For NQ1

Drawing Ref.No.	Part No.	Part Name	Qty	Remarks
19●	374G03103	Valve	1	For NQ1
20●	385G03101	Pad	1	1m, φ20, 0.6m
21●	316G02010	Clamp, hose	15	MH-50N (large)
22	356G03125	Bracket	1	
23●	128G03102	Switch, float	6	FS-08142A
24	374G03110	Orifice	1	Only NQ2
25	144G03101	Electrode, ground	6	
26※	376G03101	Filter	6	
27●	115G03102	Thermistor	1	For NQ1
28	341G03105	Rod	6	Ser.Nos.2530 and below
28	341G03105A	Rod	6	Ser.Nos.2531 and above
29●	385G03102	Pad	1	1m, φ15, 0.2m
30●	317G03103	Stopper	1	
31●	370G03103	Hose	1	1m, φ12×15, 0.5m
32●	372G03101	T-joint	1	For NQ1
33●	372G03105	Elbow, rubber Y	1	For NQ3
34●	372G03106	Elbow, rubber	2	
35	317G06070	Cap, tank	2	
36	128G02010	Switch, float	2	FS-08143A
37●	372G03108	Elbow, rubber	1	For NQS2, 90mm
38●	372G03107	Elbow, rubber	1	For NQS1, 130mm
39	379G03101	Radiator	1	For NQS

11 CIRCULATION SYSTEM (WATER-WASH SYSTEM)

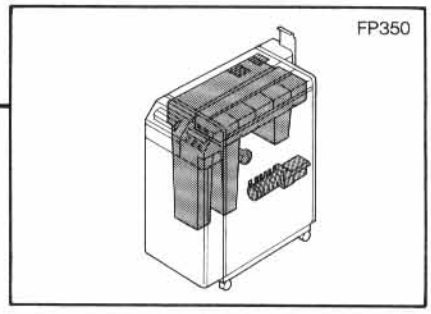

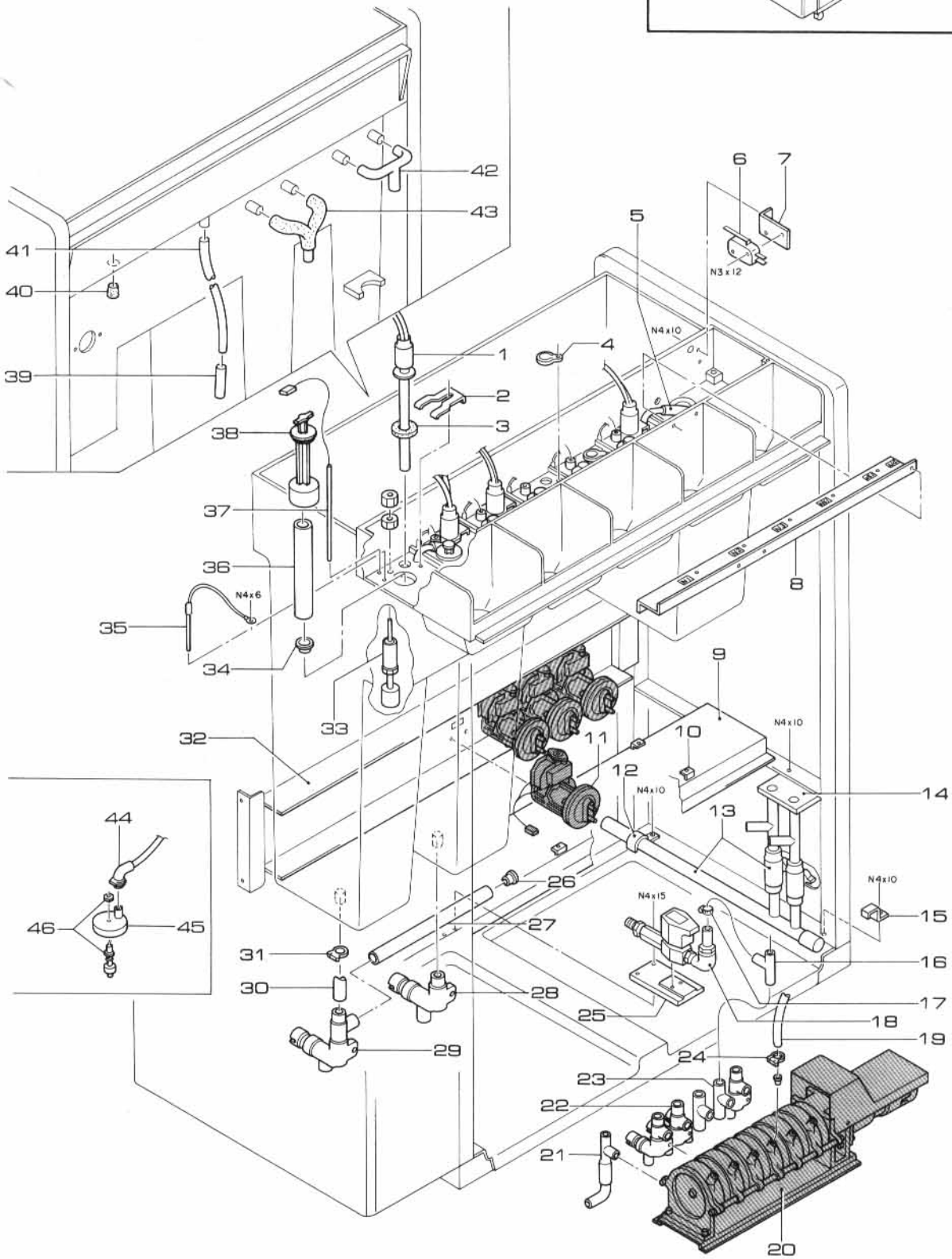

Drawing Ref.No.	Part No.	Part Name	Qty	Remarks
1●	117S0009	Heater	2	For NQ2, NQ4 240V, 200W
1●	117S0010	Heater	1	For NQ3 240V, 288W
1	117S0032	Heater	1	For NQ1 SUS
2	401G03101	Plate, keep	4	
3●	338G03111	Ring, rubber	4	
4	350G02073	Cover	2	
5●	AFNCP4-3627	Hose	1	1m, φ 6×10, 7.5m
6●	128G03019	Microswitch	3	
7	356G03123	Bracket	1	
8	350G03114	Cover	1	
9	357G03101	Bed, pump	1	
10●	386G03101	Rubber, shock-absorbing	4	
11●	133G06001	Pump	4	
12	356G03128	Bracket	1	
13●	827G03101	Valve, drain, assembly	1	
14	356G03129	Bracket	1	
15	356G03127	Bracket	1	
16●	372G03109	T-joint	3	
17●	316G03015	Clamp, hose	1	NM-6(SUS)
18●	134G03101	Valve, solenoid	1	CKD, AB41-03-7 (2.5ℓ/min)
19●	370G02002	Hose	1	1m, φ15×20, 10m
20●	133G03101	Pump	1	
21●	372G03110	T-joint	1	For NQ1
22●	374G03104	Valve	3	For NQ2, NQ3, NQ4

Drawing Ref.No.	Part No.	Part Name	Qty	Remarks
23	372G03109	T-joint	3	
24●	316G03112	Clamp, hose	30	MH-44N (small)
25	357G03102	Mount	1	
26	374G03102	Limitter, flow	3	
27	370G02002	Hose	1	φ15×20
28●	374G03105	Valve	1	For NQ3
29●	374G03103	Valve	1	For NQ1
30	385G03101	Pad	1	1m, φ20, 0.6m
31●	316G02010	Clamp, hose	15	MH-50N (large)
32	356G03125	Bracket	1	
33●	128G03102	Switch, float	6	FS-08142A
34	374G03110	Orifice	1	Only NQ2 (50HZ) Ser.Nos.7981 and above
35	144G03101	Electrode, ground	4	
36※	376G03101	Filter	6	
37●	115G03102	Thermistor	1	For NQ1
38	341G03105	Rod	6	
39●	385G03102	Pad	1	1m, φ15, 0.2m
40●	317G03103	Stopper	1	
41	370G03103	Hose	1	1m, φ12×15, 0.5m
42●	372G03101	T-joint	1	For NQ1
43●	372G03105	Elbow, rubber Y	1	For NQ3
44●	372G03106	Elbow, rubber	2	
45	317G06070	Cap, tank	2	
46●	128G02010	Switch, float	2	FS-08143A
–	372G03005	Hose, flexible	1	70cm

12

CONTROL SECTION

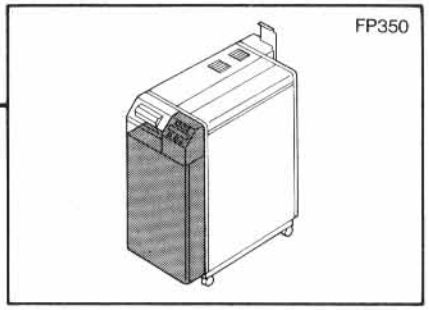

1
2
3
4
5
6
7
8
9
10
11
12
13
14
15
16
17
18
19
20
21
22
23
24
25
26
27
Tapping Screw 4 x 10
Tapping Screw 4 x 10
B4 x 10
N4 x 6

Drawing Ref.No.	Part No.	Part Name	Qty	Remarks
1●	128G03104	Keyboard	1	S1F-600415-1
1	128G03104A	Keyboard	1	Ser.Nos.3938 and above
2	350G03025	Cover	2	01-925 EAO
3●	128G03011	Switch	1	01-262-G EAO
4●	128G03013	Switch	1	01-121-R EAO
5●	128G03012	Switch	1	01-121-G EAO
6※	122G03101	Lamp	2	01-903-12 EAO
7●	103K540490	Display, character display, fluorescent	1	FD20×2AA-C NEC
8	358G03108	Box	1	
9●	113G03064	PCB, CPH	1	
9	113G03065-1B	PCB, CPH	1	Ser.Nos.9472 and above
10	316G03104	Strap	15	DLCBS-6N
11●	113G03057	PCB, power	1	
12	135G03101	Strip, terminal	5	
13	318G03013	Grommet	1	
14※	137G03041	Fuse	2	F-7170 20A 250V
15	318G03013	Grommet	1	
16	137G03031	Holder, fuse	2	
17※	137G03022	Fuse	1	8A 125V
18	137G03032	Holder, fuse	1	

Drawing Ref.No.	Part No.	Part Name	Qty	Remarks
19	369G03106	Duct	1	
20	369G03105	Duct	1	
21	369G03103	Duct	1	
22	369G03104	Duct	1	
23●	118S4iJ15GA	Motor	1	4IJ15GA-A2 Oriental
24●	395G03101	Box, gear	1	For 50Hz 4GA300K Oriental with sprocket
24●	395G03102	Box, gear	1	For 60Hz 4GA360K Oriental with sprocket
25●	325G03101	Chain	1	
26	318G03101	Grommet	1	
27	356G03126	Bracket	1	
–●	131G03005U	Relay	1	PCB, power(K4) HC-2, AC100V
–●	131G03006U	Relay	1	PCB, power(K1) HL-2, AC100V
–●	131G03102U	Relay	1	PCB, power(K2) HG-2, AC100V
–●	131G03103U	Relay	1	PCB, power(K3) H-OP, DC12V

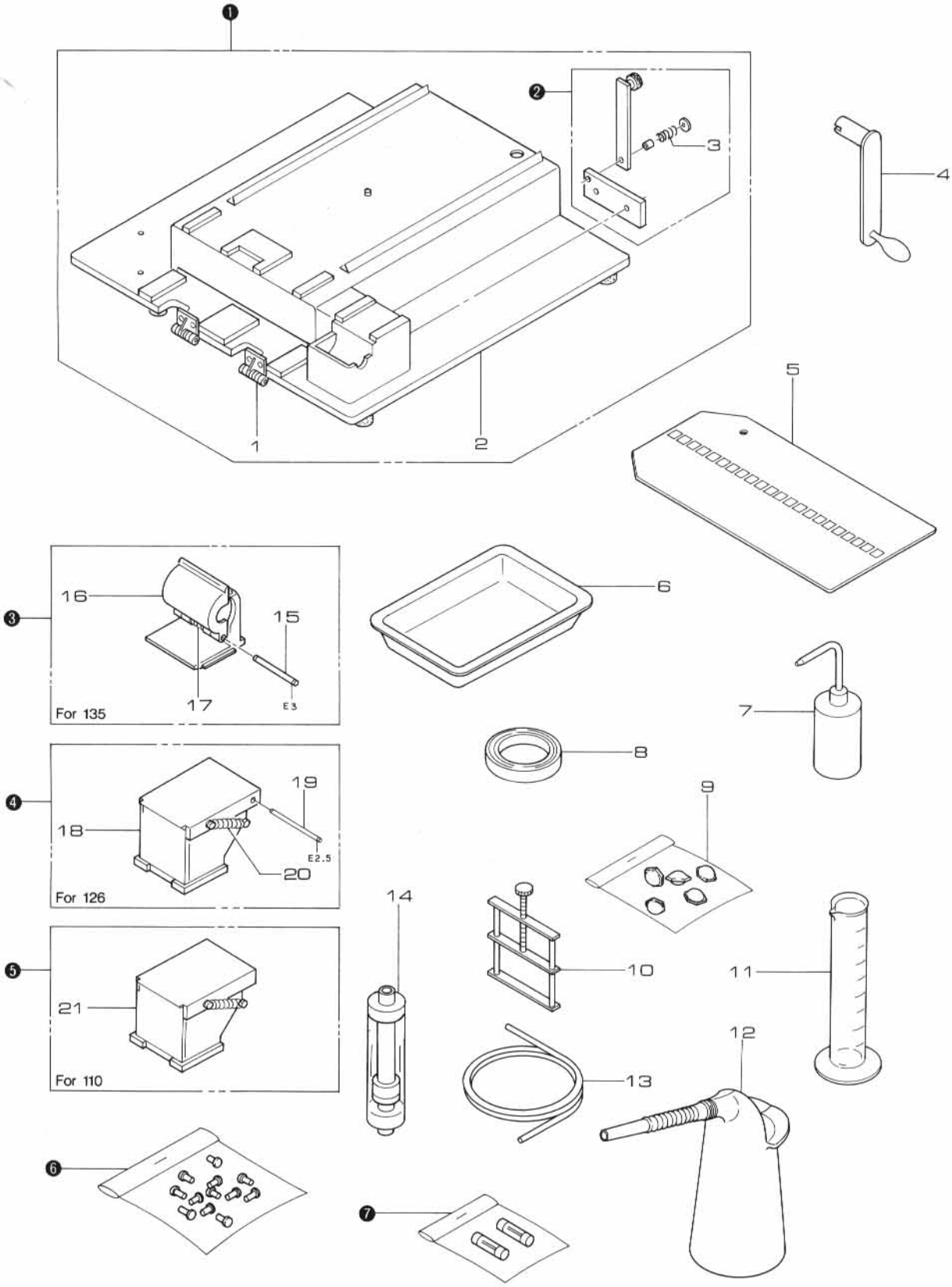
1
2
3
4
5
6
7
8
9
10
11
12
13
14
15
16
17
18
19
20
21
E3
E2.5
For 135
For 126
For 110

Drawing Ref.No.	Part No.	Part Name	Qty	Remarks
1●	314G03013	Hinge	4	
2	357G03003	Mount	1	
3●	388G03017	Spring, compression	1	
4	339G03001	Handle	1	
5	382G03001	Leader	1	10 sheets/box
5	382G03001A	Leader	1	Same as AL type
6●	359G03016	Bucket	2	
7●	403G02001	Bottle, washing	1	Optional
8※	PP6009Z200-66	Tape	1	25mm width
8※	PP6009Z201-66	Tape	1	15mm width
9●	381G03107	Ball, float	1	72 pcs.
10●	374G03106	Pinch cock	1	20mm, optional
11●	396G03102	Cylinder, measuring	1	250m ℓ optional
12●	396G03103	Cup	1	5 ℓ optional
13●	370G02002	Hose	1	1m, φ15×20, 8m (water-wash system :10m)
13	370G03103	Hose	1	1m, φ12×15, 0.5m (water-wash system :0.5m)
13	AFNCP4-3627	Hose	1	1m, φ 6×10, 9m

Drawing Ref.No.	Part No.	Part Name	Qty	Remarks
14●	396G03101	Meter, flow	1	10 ℓ optional
15	319G03024	Shaft	4	
16	360Y0006	Housing	4	
17●	388G03018	Spring, torsion	4	
18	360G03001	Housing	1	
19	319G03025	Shaft	2	
20●	388G03019	Spring, tension	4	
21	360G03002	Housing	1	
❶	842G03011	Splicing table assembly		
❷	846G03001	Cutter assembly		
❸	819G03001	Magazine assembly		For 135
❹	819G03002	Magazine assembly		For 126
❺	819G03003	Magazine assembly		For 110
❻	802G03111	Screw set		
❼※	813G03101	Fuse assembly		
–	350G03116	Dark, bag	1	Optional
–	372G03005	Hose, flexible	1	70cm (water-wash system)

FP350 PART NO. INDEX LIST

Part No.	Index No.-Ref. No.
103K540490	12-07●
107G03011	04-05
107G03101	03-37●
113G03057	12-11●
113G03064	12-09●
113G03065-1B	12-09
115G03101	09-11●
115G03102	10-27●
115G03102	11-37●
117G03102	09-04●
117S0009	10-01●
117S0009	11-01●
117S0010	10-01●
117S0010	11-01●
117S0032	10-01
117S0032	11-01
118S4iJ15GA	12-23●
119G03002	09-22●
119G03101	01-33●
119G03101	02-35●
119G03102	09-15●
120G03002	03-04●
122G03101	12-06※
128G02010	10-36
128G02010	11-46●
128G03011	12-03●
128G03012	12-05●
128G03013	12-04●
128G03018	03-39●
128G03018	04-14●
128G03019	04-15●
128G03019	10-05●
128G03019	11-06●
128G03101	03-38●
128G03102	10-23●
128G03102	11-33●
128G03104	12-01●
128G03104A	12-01
131G03005U	12---●
131G03006U	12---●
131G03102U	12---●
131G03103U	12---●
133G03101	10-17●
133G03101	11-20●
133G03101-M	10-17●
133G06001	10-10●
133G06001	11-11●
134G03101	11-18●
135G03101	12-12
135G03103	01-32
135G03103	02-34
137G03013	09-02
137G03022	12-17※
137G03031	12-16
137G03032	12-18
137G03041	12-14※
137G03101	09-03※
144G03101	10-25
144G03101	11-35
304G03101	01-20
304G03101	02-22
305G03011	04-11
308G03011	04-10
308G03012	09-37
308G03101	01-07
308G03101	02-07
308G03102	03-19
308G03103	07-27
309G03013	04-08
309G03014	03-13●
309G03101	03-03
314G03013	01-44
314G03013	02-46
314G03013	04-22●
314G03013	13-01●
314G03101	01-14●
314G03101	02-15●
314G03102	01-38●
314G03102	02-40●
314G03103	03-26●
316G02010	10-21●
316G02010	11-31●
316G03011	01-01●
316G03011	02-01●
316G03013	03-33●
316G03015	11-17●
316G03103	01-23●
316G03103	02-25●
316G03104	12-10
316G03112	10-15●
316G03112	11-24●
317G03011	04-03
317G03103	10-30●
317G03103	11-40●
317G06070	10-35
317G06070	11-45
318G03012	09-06
318G03013	12-13
318G03013	12-15
318G03101	12-26
318G03102	09-06
319G03015	05-18
319G03015	06-37
319G03015	07-32
319G03015	08-32
319G03017	05-11
319G03017	08-23
319G03019	04-01
319G03020	08-01
319G03024	13-15
319G03025	13-19
319G03027	05-18
319G03027	06-37
319G03029	08-25
319G03101	03-29
319G03102	03-30
319G03103	03-21
319G03104	03-18
319G03105	03-49
319G03106	05-32
319G03106	06-25
319G03106	06-31
319G03106	08-21
319G03107	05-16
319G03107	06-35
319G03107	07-30
319G03108	05-16
319G03108	06-35
319G03109	07-09
319G03110	07-09
319G03111	08-06
319G03112	08-39
319G03113	09-31
319G03114	07-24
319G03125	05-32
319G03125	06-31
319N1136	03-07
322G03012	03-50●
322G03101	05-23●
322G03101	06-16●
322G03101	06-29●
322G03101	07-13●
322G03101	08-18●
322G03102	05-29●
322G03102	06-23●
322G03102	06-32●
322G03102	07-19●
322G03102	08-22●
322G03103	09-09●
322G03111	09-34
322SA003	03-10●
323G03101A	05-02●
323G03101B	05-02●
323G03102	06-02●
323G03102	06-09●
323G03103	07-02●
323G03104	08-05●
323G03104B	08-05●
323G03107	08-05●
325G03101	03-15●
325G03101	12-25●
326G03013	03-17
326G03101	03-16
326G03101	09-12●
326G03103	05-22●

Part No.	Index No.-Ref. No.
326G03103	06-15
326G03103	06-28●
326G03103	07-12●
326G03103	08-17●
326G03103	09-10●
326G03104	09-08●
326G03105	05-15
326G03105	06-34
326G03105	07-29
326G03105	08-38
332G03101	01-42
332G03101	02-44
334G03013	05-13
334G03014	08-28●
334G03015	08-07●
334G03016	09-30●
334G03018	08-24●
334G03101	03-09●
334G03102	03-48●
334G03105	05-20●
334G03105	06-39●
334G03105	08-35●
334G03106	07-35●
334G03106	08-04●
334G03107	07-10●
334G03109	08-30●
334G03110	09-28●
334G03110A	09-28●
334G03110B	09-28●
334G03113	08-28
334G03114	03-48
338G03019	03-08
338G03101	05-34
338G03101	06-27
338G03101	06-30
338G03102	07-26
338G03103	08-20
338G03104	05-14
338G03104	05-17
338G03104	06-33
338G03104	06-36
338G03104	07-28
338G03104	07-31
338G03104	08-31
338G03104	08-37
338G03105	07-11●
338G03106	08-02
338G03107	09-33
338G03109	08-29
338G03110	03-51
338G03111	10-03●
338G03111	11-03●
338G03119	09-33
339G03001	13-04
340G03102	01-16●

Part No.	Index No.-Ref. No.
340G03102	02-18●
340G03103	02-10
341G03011	03-24●
341G03101	01-19●
341G03101	02-21●
341G03102	03-22
341G03103B	04-06
341G03104	03-36
341G03105	10-28
341G03105	11-38
341G03105A	10-28
343G03101	02-45
343G03101A	01-43
343G03102C	01-46
343G03102C	02-48
343G03103	01-❶
343G03103	02-❶
343G03104	01-❶
344G03101	09-27
344G03102	09-27
345G03101	01-41
345G03101	02-43
345G03107	01-40
345G03107	02-42
345G03108	03-31
345G03109	01-28
345G03109	02-30
345G03110	03-23
346G03101	05-31
346G03101	06-24
346G03101	07-23
346G03102	01-37
346G03102	02-39
347G03003	04-20
347G03101	02-17
349G03101	05-01
349G03101	05-06
349G03102	06-01
349G03102	06-04
349G03102	06-08
349G03102	06-11
349G03102	07-01
349G03102	07-04
349G03103	08-03
349G03104	08-13
350G02073	11-04
350G03020	04-13
350G03025	12-02
350G03101	01-02
350G03101	02-02
350G03101A	01-02
350G03101A	02-02
350G03102	01-06
350G03102	02-06
350G03103	01-15

Part No.	Index No.-Ref. No.
350G03103	02-16
350G03103A	01-15
350G03103A	02-16
350G03104	01-22
350G03104	02-24
350G03104A	01-22
350G03104A	02-24
350G03105	02-31
350G03105A	01-29
350G03106	01-30
350G03106A	01-30
350G03107	01-36
350G03107	02-38
350G03108	01-39
350G03108	02-41
350G03109	03-28
350G03110	08-09
350G03110	08-14
350G03111	08-33
350G03112	09-20
350G03113	01-17
350G03113	02-19
350G03114	10-07
350G03114	11-08
350G03115	01-13
350G03115	02-14
350G03115A	01-13
350G03115A	02-14
350G03116	13-—
350G03117	02-32
350G03117A	02-32
350G03118	01-03
350G03118	02-03
356G03037	03-05
356G03038	03-06
356G03101	01-08
356G03101	02-08
356G03103	01-34
356G03103	02-36
356G03104	03-27
356G03106	03-14
356G03107	03-41
356G03108	03-40
356G03108A	03-40
356G03110	03-43
356G03111	03-34
356G03112	04-04
356G03113	04-16
356G03114	06-22
356G03114	07-20
356G03115	06-26
356G03115	07-25
356G03116	05-28
356G03116	06-21
356G03116	07-18

FP350 PART NO. INDEX LIST

Part No.	Index No.-Ref. No.
356G03117	09-13
356G03118	09-17
356G03119	09-23
356G03120	09-25
356G03121	09-35
356G03122	09-29
356G03123	10-06
356G03123	11-07
356G03125	10-22
356G03125	11-32
356G03126	12-27
356G03127	11-15
356G03128	11-12
356G03129	11-14
356G03161	05-30
356G03161	07-20
356G03162	05-33
356G03162	06-26
356G03162	07-25
356G03188	09-35
357G03003	13-02
357G03101	10-08
357G03101	11-09
357G03102	11-25
358G03101	01-11
358G03101	02-12
358G03102	01-26
358G03102	02-28
358G03103	03-25
358G03105	09-01
358G03106	09-07
358G03107	09-21
358G03108	12-08
358G03109	01-11
358G03109	02-12
358G03110	03-32
359G03016	13-06●
359G03101	01-04
359G03101	02-04
359G03101A	01-04
359G03101A	02-04
359G03103	01-12
359G03103	02-13
359G03104	01-●
359G03104	02-●
359G03105	01-18●
359G03105	02-20●
359G03114	01-❷
359G03114	02-❷
359G06015	01-27●
359G06015	02-29●
360G03001	13-18
360G03002	13-21
360Y0006	13-16
362G03012A	03-02●

Part No.	Index No.-Ref. No.
362G03101	01-05
362G03101	02-05
362G03102	01-21
362G03102	02-23
363G03013	04-12
363G03062A	04-18
363G03064	03-11
363G03201	03-42
363G03202	05-05
363G03202A	05-05
363G03203	05-08
363G03204	05-08
363G03205	05-09
363G03205A	50-09
363G03206	05-12
363G03206A	05-12
363G03207	05-19
363G03207	06-38
363G03207	07-34
363G03207	08-36
363G03207	08-36
363G03207A	05-19
363G03207A	07-34
363G03207A	08-36
363G03207B	05-19
363G03208	05-21
363G03208	06-40
363G03208	08-34
363G03209	07-33
363G03210	06-03
363G03210	06-10
363G03211	06-06
363G03211	06-13
363G03212	06-14
363G03213	06-07
363G03214	07-03
363G03215	07-06
363G03216	07-08
363G03216A	07-08
363G03217	07-21
363G03218	07-22
363G03219	08-08
363G03220	08-16
363G03221	08-10
363G03222	08-11
363G03222	08-15
363G03223	08-12
363G03224	08-27
363G03224A	08-27
363G03225	09-24
363G03226	09-36
363G03229	01-45
363G03229	02-47
363G03232A	07-08
363G03233A	07-07

Part No.	Index No.-Ref. No.
363G03235	08-26
363G03236	03-42
364G03101	01-10※
364G03101	02-11※
364G03102	01-35
364G03102	02-37
364G03103	09-05
364G03105	09-16
364G03107	09-19
367G03101	01-25●
367G03101	02-27●
368G03011A	04-23
368G03011B	04-23
368G03011C	04-23
368G03011D	04-23
369G03101	09-14
369G03103	12-21
369G03104	12-22
369G03105	12-20
369G03106	12-19
370G02002	10-12
370G02002	10-16●
370G02002	11-19●
370G02002	11-27
370G02002	13-13●
370G03103	10-31●
370G03103	11-41
370G03103	13-13
372G03005	11-—
372G03005	13-—
372G03101	10-32●
372G03101	11-42●
372G03102	05-04●
372G03103	05-03
372G03104	05-10
372G03105	10-33●
372G03105	11-43●
372G03106	10-34●
372G03106	11-44●
372G03107	10-38●
372G03108	10-37●
372G03109	11-16●
372G03109	11-23
372G03110	10-18
372G03110	11-21●
373G03104	01-24
373G03104	02-26
374G03102	10-11
374G03102	11-26
374G03103	10-19●
374G03103	11-29●
374G03104	10-14●
374G03104	11-22●
374G03105	10-13●
374G03105	11-28●

Part No.	Index No.-Ref. No.
374G03106	13-10●
374G03110	10-24
374G03110	11-34
375G03102	01-31
375G03102	02-33
376G03001	09-18※
376G03101	10-26※
376G03101	11-36※
379G03101	10-39
381G03101	05-07※
381G03101A	05-07※
381G03102	06-12※
381G03102A	06-12※
381G03103	05-07※
381G03103A	05-07※
381G03103B	05-07※
381G03104	07-05※
381G03104A	07-05※
381G03105	06-05※
381G03105A	06-05※
381G03106	07-05※
381G03106A	07-05※
381G03107	13-09●
382G03001	13-05
382G03001A	13-05
384G03101	06-18※
384G03101	07-15※
384G03102	05-26※
384G03102	06-19※
384G03102	07-16※
384G03103	05-❹●
384G03103	06-❸●
384G03103	07-❸●
384G03104	05-25
384G03104	06-18
384G03104	07-15
385G03014	01-09
385G03014	02-09
385G03101	10-20●
385G03101	11-30
385G03102	10-29●
385G03102	11-39●
386G03004	04-17
386G03101	10-09●
386G03101	11-10●
387G03001	09-26●
388G03001	03-12●
388G03012	04-09●
388G03013	04-02●
388G03014	04-19●
388G03016	09-32●
388G03017	13-03●
388G03018	13-17●
388G03019	13-20●
388G03101	03-20●
388G03102A	03-44●
388G03103	03-35●
388G03115	09-32●
393G03011	04-07※
395G03101	12-24●
395G03102	12-24●
396G03101	13-14●
396G03102	13-11●
396G03103	13-12●
401G03012	04-21
401G03101	10-02
401G03101	11-02
401G03102A	03-01
401G03103	03-45
401G03104	05-24
401G03104	06-17
401G03104	07-14
401G03105	05-27
401G03105	06-20
401G03105	07-17
401G03106	08-19
401G03107	05-24
401G03107	06-17
401G03107	07-14
403G02001	13-07●
801G03101	03-❶
802G03101	05-❶●
802G03102	06-❷●
802G03103	05-❷●
802G03104	07-❶●
802G03105A	06-❶●
802G03106	08-❶●
802G03107	05-❸●
802G03108	07-❷●
802G03109	07-❷●
802G03110	08-❷●
802G03111	13-❻
802G03112	07-❷
802G03112A	07-❷
802G03113	07-❷
802G03113A	07-❷
802G03115	07-❶●
810G03011	04-❶●
810G03011A	04-❶●
810G03011B	04-❶●
810G03011C	04-❶●
810G03012	03-❷●
810G03101	03-❸
810G03102	03-❺
812G03101A	03-46●
812G03101A	03-47●
812G03101A	03-❹●
813G03101	13-❼※
819G03001	13-❸
819G03002	13-❹
819G03003	13-❺
827G03101	11-13●
842G03011	13-❶
846G03001	13-❷
AFNCP4-3627	10-04●
AFNCP4-3627	11-05●
AFNCP4-3627	13-13
PP6009Z200-66	13-08※
PP6009Z201-66	13-08※